LOVOL TE Series Wheeled Tractor

ARBOS TE Series Wheeled Tractor

TE4043C, TE4043R, ARBOS 2040

Operation Manual

Weichai Lovol Heavy Industry Co., Ltd.

of the People's Republic of China

Record Form of Product Identification Marks

Record Form of Product Identification Marks

Product trademark	
Product model	
Machine No.	
Vehicle Identification No.	
Engine model	
Engine number	
Purchase time	
Purchase place and contact information	
User name	
Name of manufacturer	Weichai Lovol Heavy Industry Co., Ltd. of the People's Republic of China
Address of manufacturer	No. 192, South Beihai Road, Fangzi District, Weifang City, Shandong Province, the People's Republic of China
Contact number of manufacturer	0086-536-7608330

Note: 1. The user shall fill in this form carefully when purchasing the machine;
2. The numbers in the form shall be recorded completely (including letters).

LOVOL TE Series Wheeled Tractor

ARBOS TE Series Wheeled Tractor

TE4043C, TE4043R, ARBOS 2040

Operation Manual

Weichai Lovol Heavy Industry Co., Ltd. of the People's Republic of China

* * *

Book size: 787X1092 1/16 No.:

First published in April 2021 Printed for the xx time in xx

Instructions to Users

Dear users,

Thank you for your trust in our company, and buy LOVOL TE and ARBOS TE series wheeled tractors produced by our company. Please pay attention to the following important information in order to use the tractor correctly, reasonably and efficiently:

1. Before using this tractor, please read this manual carefully regardless of your previous driving experience. This will help you operate the tractor more reasonably and effectively;

2. In order to create more economic benefits for you and prolong the service life of the tractor, please read this manual and the supporting operation manuals of the engine and farm implements carefully before using this product, and implement the provisions in the manual strictly to operate, repair and maintain the tractor so as to give full play to the performance of the tractor;

3. Please do not modify the tractor at will, or the tractor performance may be affected and accidents may occur. In addition, it will cause the consequence that it is difficult to perform the "Three Guarantees" service;

4. Due to the large difference between local agricultural and soil conditions, the recommended purposes, parameters, supporting agricultural implements and operation efficiency in this Operation Manual may be different. Please make a selection according to the actual situation;

5. This tractor can only be operated, maintained and repaired by personnel who are familiar with the characteristics of the tractor and have relevant safety and operation knowledge;

6. The driver must hold the driving license for agricultural vehicles and tractors issued by the local transportation department;

7. Observe local safety regulations and road traffic rules at all times to prevent accidents;

8. Do not exceed the specification in the instruction manual during use, or it may cause performance degradation or malfunction of the tractor;

9. This instruction manual can help the operator to conduct high level operation, but it is not a guarantee certificate. The data, illustrations and instructions in this Instruction Manual are only used to operate, maintain and repair the machine.

10. Our company will make design changes to the components in due course, so the contents of this Manual may be inconsistent with the physical components. Please understand that changes to the contents of the instruction will be made without prior notice.

11. Any problems during use, such as product quality problems, product adaptability problems, product optimization and rectification suggestions, quality problems of purchased accessories, and satisfaction with the Three Guarantees service can be fed back to the after-sales service email: ag_service@global.lovol.com.

Overview

This Instruction Manual introduces in detail the safety precautions, running-in, use, technical maintenance, adjustment, faults and troubleshooting methods of LOVOL TE and ARBOS TE series wheeled tractors, which can be used as a reference for tractor drivers and maintenance personnel.

In this Manual, the safety warning symbol ⚠ indicates important safety information. When you see this symbol, you should be alert to possible harm, carefully read the information under this symbol and inform other operators.

⚠ Warning: It indicates a potentially hazardous situation that may cause death or serious injury if not avoided;

The safety symbol should be an orange exclamation mark on a black triangle background.

⚠ Note: It indicates a potentially hazardous situation that may cause low or moderate injury if not avoided;

The safety sign should be a yellow exclamation mark on a black triangle background.

Important: It explains the matters that may cause damage to the machine or environment.

Note: Describe some supplementary information.

Please read the information behind the sign carefully and inform other operators.

This Operation Manual is an important part of the product and is provided to the user together with the tractor. Please keep it properly.

In the process of using this Manual, if there is any problem in understanding of any part, please call the service hotline: 0086-536-7608330 for consultation.

Intended Use

LOVOL TE and ARBOS TE series wheeled tractors are multipurpose medium-sized agricultural wheeled tractors. The machine is featured with compact structure, convenient operation, flexible steering, large traction force, wide application and convenient and convenient maintenance. Ploughing, harrowing, sowing, harvesting and other operations can be carried out if appropriate farm implements are provided. If the tractor is equipped with a trailer, transportation operations for agricultural purposes can be carried out. The total weight of the trailers shall strictly comply with the engraving quality of the nameplate. The tractor can be connected with the straw reclamation machine through the power take-off for straw reclamation, and can also be used as the motive power of the water pump and the thresher. Do not use agricultural tractors in environments that may lead to exposure to

hazardous substances, such as those where pesticides are sprayed, or under conditions that may lead to falling or puncture.

Please provide supporting agricultural implements (see agricultural implements listed in Appendix 9.5) correctly in accordance with the requirements of this manual to obtain the maximum economic benefits. The user shall strictly observe the use, maintenance and repair conditions specified by the manufacturer and the basic requirements for expected application. Other operations are contrary to the expected application of the tractor.

The operators, maintenance and repair personnel of this machine must be familiar with the characteristics of tractors and relevant safety operation specifications.

Laws and regulations, safety regulations and road traffic laws to avoid accidents must be observed.

If this tractor is modified without authorization or used in operations contrary to the intended use of the tractor, it may lead to reduced machine reliability,, machine damage and personal injury, and the manufacturer will not be responsible for this, please note.

Comparison between Chinese and English Units

S/N	Unit type	International unit
1	Time	s
2		min
3		h
4	Length	mm
5		cm
6		m
7		km
8	Force	N
9		kN
10	Torque	N·m
11	Weight	kg
12		g
13	Pressure	Pa
14		kPa
15		MPa
16		kgf/cm^2
17	Temperature	℃
18	Speed	km/h
19	Angular velocity	r/min
20	Current	A
21	Voltage	V
22	Volume	L
23		ml
24	Flow rate	L/min
25	Power	kW
26		PS
27	Oil consumption:	g/kW·h
28	Battery capacity	A·h

Chinese and English Comparison of Common Units

Chinese and English Comparison of Common Units

S/N	Unit category	International unit	Chinese version
1	Time	s	Second
2		min	Minute
3		h	Hour
4	Length	mm	Millimeter
5		cm	Centimeter
6		m	Meter
7		km	km
8	Force	N	Newton
9		kN	kN
10	Torque	N·m	N·m
11	Mass	kg	Kilogram
12		g	Gram
13	Pressure	Pa	Pa
14		kPa	Kilopascal
15		MPa	Megapascal
16		kgf/cm^2	Kgf/cm^2
17	Temperature	℃	Degree Celsius
18	Speed	km/h	Kilometer/hour
19	Speed	r/min	Revolutions per minute
20	Current	A	Ampere
21	Voltage	V	V
22	Volume	L	Litre
23		ml	Milliliter
24	Flow	L/min	Liters per minute
25	Power	kW	Kilowatt
26		PS	Horsepower
27	Fuel consumption	g/kW·h	g / kW·h
28	Battery capacity	A·h	Ampere·h

Table of Contents

Table of Contents

Table of Contents

1 Safety Precautions

1.1 Safety Rules and Precautions for Use

Must-read before operation

1. The driver must fully read and understand the vehicle usage and maintenance specifications and safety warning signs introduced in the Instruction Manual.
2. The driver must remember the correct operation and operation methods.

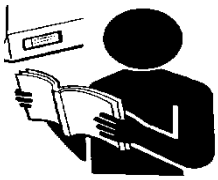

Fig. 1-1 Must-read before Operation

Qualified operators

1. The driver must have sufficient judgment ability when operating the tractor.
2. People who feel unwell, drunk and lack of sleep, pregnant women, color blinds and people under 18 years old shall not operate the tractor.
3. The driver shall be specially trained, awarded a driving license and inspected on time.
4. The initial operator shall run at a low speed before being skilled.
5. When the vehicle is shut down and parked in a safe position, the driver can get on the vehicle through the steps at the left or right doors.
6. The driver can get off the vehicle from the steps at the left or right doors only after the vehicle is parked in a safe position and powered off.

Fig. 1-2 Qualified Operators

Driver's clothing

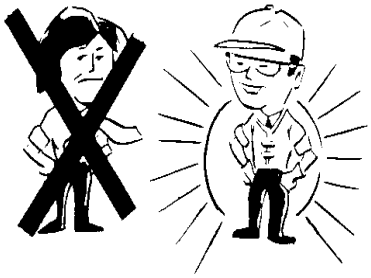

1. During operation, the driver shall wear suitable tight work clothes. It is not allowed to wear large coats and shirts, ties, scarves or necklaces and other articles. If a female driver has long hair, please pull up the long hair.
2. When you are near the tractor or running parts at work, please pull up the long hair, and do not wear ties, scarves or necklaces and other articles. If these articles are entangled, serious personal injury may be caused.
3. Please wear a safety helmet, goggles, gloves, safety shoes, and other protective devices as required.

Fig. 1-3 Driver's Clothing

Fig. Use of Fuel

1. The fuel is flammable, and it is strictly prohibited to approach the fire during filling.
2. The engine must be shut down before refueling the fuel tank.
3. Do not smoke when refueling and overhauling the fuel system.
4. Please wipe the spilled fuel or oil with a clean rag.
5. The quality of fuel and lubricating oil shall be in strict accordance with the requirements specified in the "Appendix".

Fig. 1-4 Use of Fuel

Disposal of waste oil

1. The replaced working liquid is waste oil and cannot be discarded at will.
2. The replaced battery acid will pollute the environment and shall not be discarded at will.

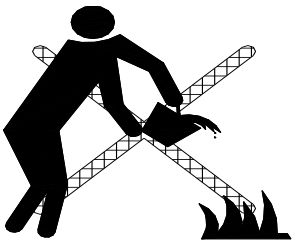

Fig. 1-5 Disposal of Waste Oil

In case of leakage

Do not touch the high-pressure oil leaked from the oil pipe directly by hand, but use thick paper or hardboard to locate where leakage occurs.

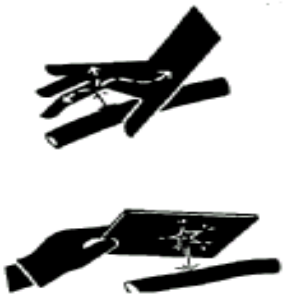

Fig. 1-6 Pipeline Leakage

Handling of emergencies

1. When the brake fails, keep the steering wheel steady, stop the engine immediately when reaching a safe place, and shut down the engine.
2. If the steering wheel fails, immediately stop the brake and then shut down the engine.
3. When the machine is on fire, the engine shall be shut down immediately. If there is a fire extinguisher, it can be used to aim downward at the root of the flame;
The fire can be extinguished by sand if there is no fire extinguisher.
4. In case of a safety accident, the local first-aid center, hospital or fire department shall be called immediately as appropriate.

Proper support of tractor

1. If the tractor or its components must be lifted, they shall be safely supported so as to lower the components or appliances on the ground.

2. Do not support the machine with coal cinders, (hollow) bricks, hollow tiles or other supports that may fracture under sustained pressure.

3. Do not work under a tractor supported by only one jack.

4. Before operating the jack, read and understand its Instruction Manual in detail. Overload is strictly prohibited. It can only be used above the hard supporting surface to prevent personal injury or property damage.

5. During use, the jack can only be supported directly under the left and right axle shaft shells and front bracket of the tractor rear axle, and other parts are not allowed to be supported.

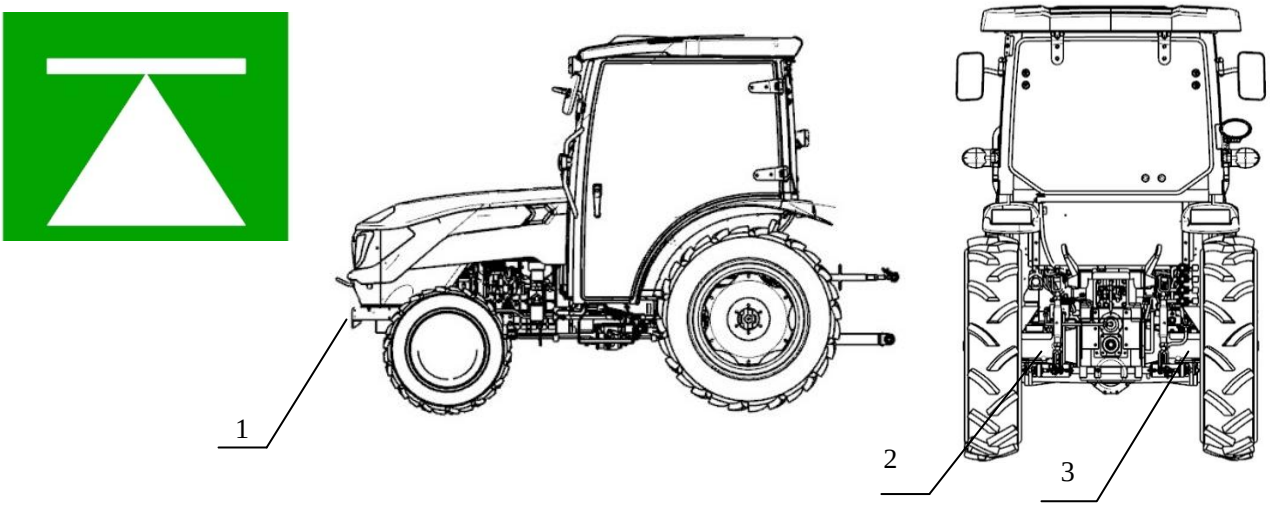

Fig. 1-8 Position of jack support: 1. Front support 2. Left half axle housing 3. Right half axle housing

Emergency exit of the cab

The cab has three exits, i.e. left door, right door and rear window. The rear window is used as an emergency exit. In case of emergency, the driver opens the rear window by turning the rear window unlock handle clockwise and escape from the cab.

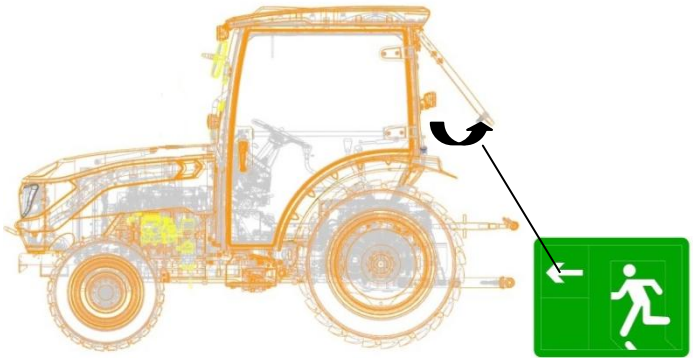

In addition, in case of an emergency, the driver can break the glass with breaking tools and escape from the cab.

Precautions for installing farm implements or tractor-trailer

1. Before trailed implements or trailers are installed, the engine must stop running and the tractor shall be parked in a safe position. Please read the installation instructions of farm implements or trailers, symbolic meanings and user manuals carefully.
2. The requirements of the operation manual must be strictly complied with. Do not operate a tractor connected with farm implements or trailers until installation is completed.
3. When connecting farm implements or trailers to tractors, inexperienced operators may be injured. Therefore, the operator must be a professional.
4. The farm implements must be lowered to the ground before the site operators leave the tractor.
5. The area between the tractor and the trailer shall not be occupied when the tractor and the trailer are in operation.

Warning:

1. For the safety of your life and property and the happiness of your relatives, please operate safely.

2. When starting the tractor, pay attention to whether there are obstacles on the road, whether there are people between the tractor and farm implements or trailer, and whistle for warning to prevent accidental danger due to the sudden start of the tractor.

3. Do not start and operate the tractor at a position away from the driver's seat. When starting the tractor, make sure that each shift lever is in the neutral position, the power output control handle and the front-drive control handle are in the separated state, and the operating handle of the lifter is in the neutral position to prevent accidental danger due to the sudden start of the tractor.

4. Do not start the engine by jumping the short-circuited terminal. Otherwise, when the transmission is in gear, the tractor will automatically run out of control, resulting in accidental danger.

5. The movement of each pedal shall not be obstructed, and all pedals must be able to return to the original position without hindrance. Do not place any object on the floor or under the pedal that hinders the pedal travel, or any object that will roll or slide when the pedal is stepped on. No additional foot blanket or other mattresses shall be placed around the pedal to prevent them from affecting the pedal movement and causing accidental danger.

6. When the tractor is moving, no one is allowed to get on or off the tractor. When the engine is running, it is not allowed to climb under the tractor for inspection and repair to prevent accidental danger.

7. After parking, the driver must take out the key, set the shift lever to the neutral position and lock the parking brake lever before coming down from the tractor, so as to prevent the tractor from starting suddenly and losing control of its own operation, resulting in accidental danger.

8. During transportation, the left and right brake pedals must be interlocked to control the speed reasonably. When crossing culverts and bridges, full attention shall be paid to whether there is superelevation. When turning to a corner, full deceleration shall be made in advance to avoid accidents, causing rollover and collision.

9. When driving uphill and downhill, it is necessary to use the lowest gear and reasonably use the accelerator control. It is strictly prohibited for the tractor to slide down the slope with neutral gear or step on the clutch pedal. Do not shift gears when driving uphill and downhill, so as to avoid the risk of rollover.

10. The tractor shall not make sharp turns during high-speed driving. It is not allowed to turn sharply with

unilateral brake to avoid the risk of rollover.

11. When the tractor is running on the road, it is necessary to pay attention to traffic signs and strictly abide by traffic regulations to avoid accidental safety hazards.

12. During the transfer, the traffic rules must be strictly observed, and the driving distance between two tractors shall be at least 60m, so as to avoid accident danger of collision.

13. Since the subgrade near the ditch, cave, embankment, etc. is fragile, the weight of the tractor may cause it to collapse. Therefore, please drive around, otherwise, it may cause accidental danger.

14. The tractor shall not be overloaded or overused. Over-limit work is strictly prohibited, so as to prevent the parts from being overloaded, resulting in damage to the machine or even personal casualty accidents.

15. When the tractor is working at night, it shall be equipped with good lighting equipment to avoid affecting the working effect of the tractor and causing accidental danger.

16. When the tractor is engaged in harvesting or yard operation, a spark extinguishing device must be installed on the exhaust pipe to avoid the risk of accidental fire.

17. When working on rainy and snowy days, it is necessary to reduce the operation speed, so as to avoid the risk of rollover caused by slippery roads and ground.

18. During power output operation, reliable connection and protection must be ensured to avoid personal injury caused by falling out of moving parts.

19. When coupling and towing machines and tools, it is necessary to ensure that each pin shaft is connected reliably and firmly to avoid the risk of the collision caused by falling off of the pin shaft. When disconnecting and towing machines and tools, it is necessary to ensure that all pin shafts are in a separate state to avoid damage to the machine and personal safety caused by unclear separation.

20. During lifting, attention must be paid to the control of engine throttle to avoid damage to the machine and personal safety caused by too fast lifting speed.

21. When charging the battery, make sure that the exhaust hole of the fluid injection plug is unblocked and away from an open fire. Cut off the power supply first after charging to avoid an explosion.

22. The allowable safety height of high-voltage transmission lines shall be strictly observed to avoid the risk of accidental danger.

23. Do not use tractors in areas where rollover may occur.

24. Prevent oil spillage when filling or cooling the engine or transmission after the tractor finishes its work.

25. No one shall stand around the suspension position when a three - point suspension mechanism is being used.

26. The implement must be lowered to the ground before separating it from the tractor.

27. Users can adjust the PTO speed through the PTO operating device based on the functions of farm implements and trailers. The PTO speed is 540/720 or 540/1000.

28. When the PTO drive shaft is to be used, the end cover of the PTO shaft must be removed to ensure that the protective cover in the working area is installed correctly.

29. Under no circumstances shall the tractor be used when the tractor operation is at risk of overturning.

30. Tractors are strictly prohibited to operate in thunderstorm weather. Vehicle and personal injury may be caused easily otherwise.

31. When removing the installation machinery, lower the machine to the ground first.

⚠ Notes:

1. The bolts, nuts and easy-to-loosen parts at various connecting parts, such as fixing nuts of front and rear drive wheels and connecting nuts of steering rod, shall be checked frequently, and tightened in time in case of any looseness, so as to avoid accidental danger.

2. When the power take-off shaft of the tractor works, the protective cover of the power take-off shaft must be installed. It is strictly prohibited for personnel to get close to the power take-off shaft. When the power take-off shaft is loaded, the tractor shall not turn sharply to avoid damaging the universal joint or the power take-off shaft of the tractor. When the power take-off shaft is not used, the handle shall be in a separated position to avoid accidental danger.

3. After parking, the driver shall not leave the tractor before the engine is shut down to prevent the tractor from starting suddenly and losing control of its own operation, resulting in accidental danger.

4. When you have to park your tractor on the slope, it is necessary to keep the hand brake handle in a working state, shut down the engine, and engage gear (forward gear at uphill position and reverse gear at downhill position). The parking brake must be used and the rear wheels shall be plugged with triangular plug blocks to prevent the tractor from losing control of its own operation, resulting in accidental danger.

5. The installation and adjustment of tires can only be carried out by experienced professionals with appropriate special tools. Improper installation of tires will cause serious accidents.

6. When cleaning the water tank, it is necessary to shut down the engine and wait for the water tank to cool before cleaning, so as to avoid scald and damage to the water tank.

7. Before the installation and use of optional parts, replacement parts or coupling machines and tools, please pay attention to safety and carefully read the safety signs and the Operation Manual.

8. Ensure that children are away from tractors, working machines and tools, and working areas and are under the care of other adults. Under no circumstances are children allowed to ride in or drive tractors.

Important:

1. The newly delivered or overhauled tractor must be subject to running-in according to the running-in requirements of the tractors to avoid affecting the normal service life of the tractor.

2. The tractor shall use various solutions in strict accordance with the requirements. Before filling, the fuel must be precipitated and purified for at least 48h, and the lubricating oil of the transmission system must be filtered by an oil filter with the same precision as the oil suction filter of the lifter, so as not to affect the service life of relevant parts and components as well as the operation efficiency of the tractor.

3. Before starting the tractor, it is necessary to check the oil line, circuit and cooling water. After starting, attention must be paid to the readings of each instrument and the normal operation of each tractor component.

4. Before using the power take-off shaft to drive the farm implements, check the matching rationality of the tractor and the driving farm implements. During farming, the included angle between the power take-off shaft and

the universal joint drive shaft shall be not more than 15 °. When the hydraulic control is normal, the included angle between the power take-off shaft and the input shaft of farm implements and the drive shaft shall be not more than 20 °after the farm implements are lifted during the turning. It is forbidden to put the rotary cultivator into the soil before the power output is connected, or it will cause damage to the rotary cultivator and serious damage to the tractor clutch [in order to improve the operation efficiency, the power source may not be cut off when turning, but the lifting height of the machines and tools must be about 200mm above the ground].

5. The position of the farm implements shall be locked when the tractor with farm implements suspended upon is transferred; the driver must lower the farm implements to the ground when leaving the tractor.

6. When the temperature is lower than 0 ℃ in winter, antifreeze must be used to avoid freezing of water tank, engine and other important components.

7. The front drive axle of the tractor should be only used in farmland operation and when the tires slip on the muddy road. It is strictly prohibited to use in other cases, or it will easily cause early wear of tires and the transmission system.

8. To repair the tractor, qualified parts and components must be selected.

Unscrew the radiator cap

Be careful to unscrew the radiator cap when the engine is still hot. After idling for several minutes, shut down the engine and cool it down, and then unscrew the radiator cap to the first gear. After the pressure is reduced, unscrew the cap.

Note: Inflammables and explosives shall not be placed close to the tank filler.

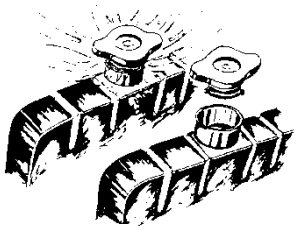

Fig. 1-9 Unscrew the Radiator Cap

During maintenance of electrical components

1. Pull out the key of the electric lock switch.
2. Do not repair the electrical appliance before turning off the battery master switch.
3. When the tractor is repaired by electric welding, it is necessary to disconnect the battery ground wire and unplug the large connection plug of the engine and hydraulic computer controller (if equipped),

or it will easily cause damage to the battery, controller and combination instrument.

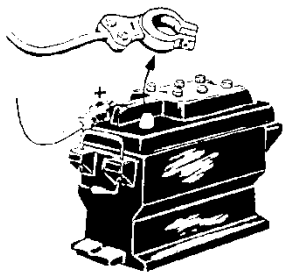

Fig. 1-10 During Maintenance of Electrical Components

When the tractor is abnormal

1. Do not allow the tractor to work "with fault", In particular, when there is no oil pressure, too low oil pressure and too high water temperature or abnormal noise and smell, it is necessary to stop the tractor in time for inspection and troubleshooting.
2. The engine should be turned off during lubrication and maintenance as well as field adjustment.

Fig. 1-11 Abnormal Phenomenon of Tractor

1.2 Safety Warning Signs

Warning:

1. Safety warning signs shall be kept clear and visible. If they become dirty, wash them with soapy water and wipe them clean with a soft cloth.
2. If the safety signs are lost or unclear, contact the distribution department or manufacturer for replacement in time.
3. If the parts with safety warning signs are replaced, the safety warning signs shall be replaced at the same time.
4. The contents prompted by safety warning signs must be strictly implemented as they involve personal safety.

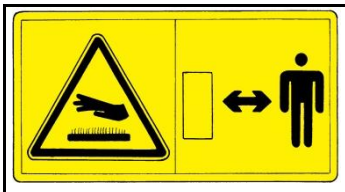

Meaning: please keep a distance from the hot surface of the machine when the machine is working to avoid personal injury;

Sticking position: outside of silencer and side of water tank.

Fig. 1-12 Safety Warning Sign IV

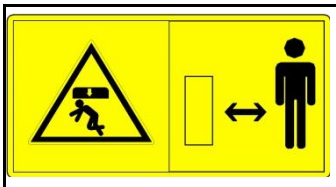

Meaning: please keep a safe distance from the tractor to avoid personal injury;

Sticking position: rear side of mudguard.

Fig. 1-13 Safety Warning Sign II

Meaning: It is forbidden to ride on the non-occupant position of the tractor to avoid obstructing the driver's sight and causing personal injury;

Sticking position: front side of left and right mudguards

Fig. 1-14 Safety Warning Sign VI

Meaning: When the lifting rod control mechanism is working, keep away from the lifting area of the pull rod to avoid personal injury;

Sticking position: rear end of the left and right sides of mudguard.

Fig. 1-15 Safety Warning Sign III

Meaning: Before repair, maintenance and adjustment, it is necessary to shut down the engine, pull out the start key and operate in accordance with the requirements of the Operation Manual to avoid personal injury;

Sticking position: front of dashboard.

Fig. 1-16 Safety Warning Sign I

Meaning: When the engine is working, do not open or remove the protective cover, and do not put your hands into the working area to avoid personal injury;

Sticking position: on the engine protective cover.

Fig. 1-17 Safety Warning Sign IX

Meaning: The driver must start the engine on the driver's seat. It is strictly prohibited to start the engine by short circuit at the starter to avoid personal injury;

Sticking position: front of dashboard.

Fig. 1-18 Safety Start Sign

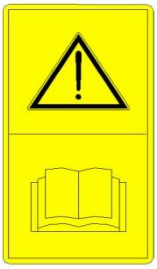

Meaning: Please read the Operation Manual to understand the meaning of safety sign without text to avoid personal injury;

Sticking position: front of dashboard.

Fig. 1-19 Sign of Reading Instructions

Meaning: Only after all parts of the machine have stopped working completely, can they be contacted to avoid personal injury;

Sticking position: on the protective cover of PTO (power take-off shaft).

Fig. 1-20 Safety Sign for Power Output

Meaning: During maintenance of the battery, please refer to the Operation Manual for correct maintenance procedures to avoid personal injury;

Sticking position: upper surface of battery.

Fig. 1-21 Battery Sign

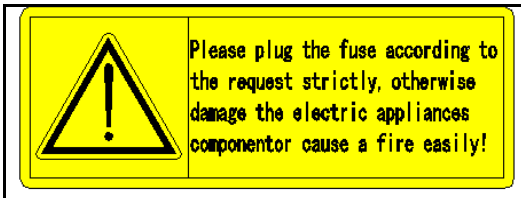

Meaning: as shown in Fig. 1-22;

Sticking position: near the electric box.

Fig. 1-22 Safety Warning Signs of Fuse

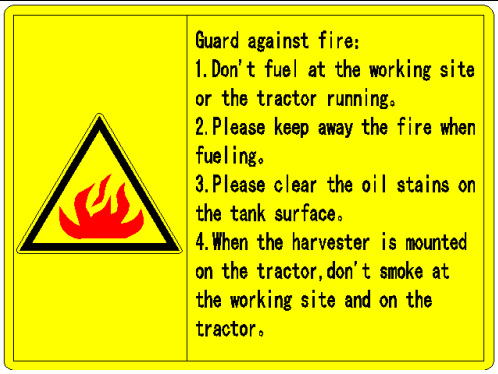

Meaning: as shown in Fig. 1-23;

Sticking position: near the fuel tank filler.

Fig. 1-23 Fire Prevention Sign of Refueling

Meaning: as shown in Fig. 1-24;

Sticking position: near the power take-off shaft.

Fig. 1-24 Safety Sign for Power Output

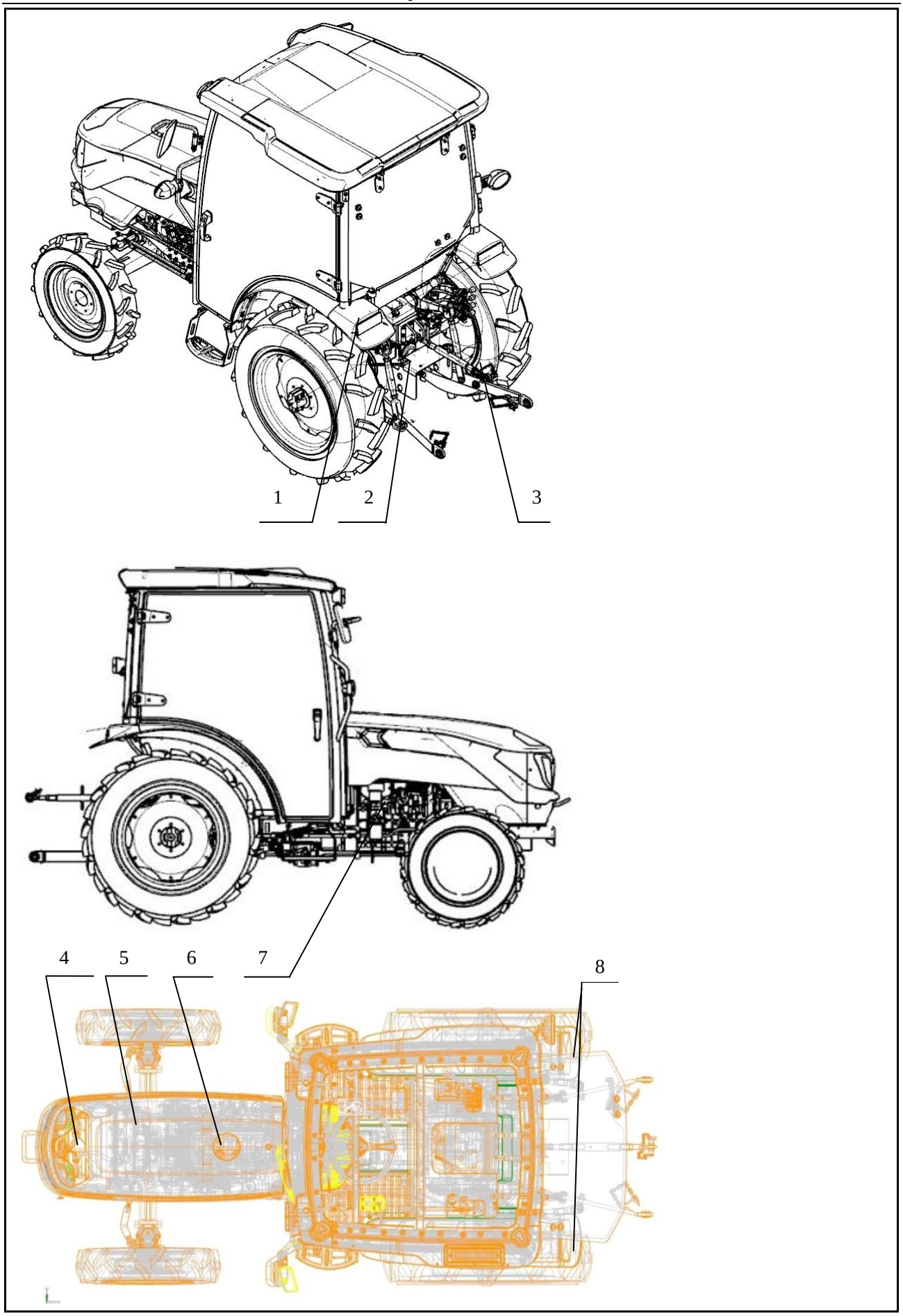
1
2
3
4
5
6
7
8

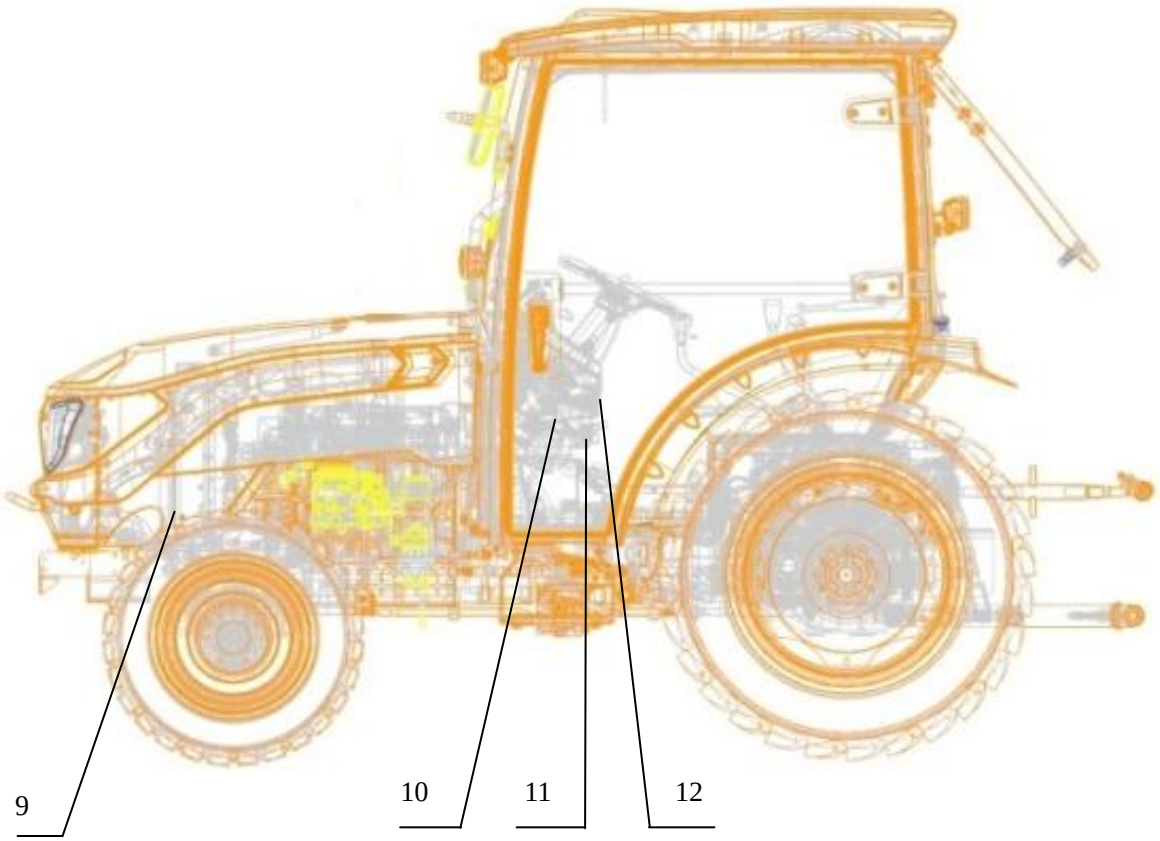

1. Safety warning sign VI 2. Power output safety sign 3. Safety warning sign III 4. Battery sign 5. Safety warning sign IX

6. Fire prevention sign for refueling 7. Safety warning sign IV 8. Safety warning sign II 9. Safety warning sign IV

10. Safety starting sign

11. Fuse safety warning sign 12. Instructions sign

2 Product Mark

Product nameplate

The tractor's product nameplate and important identification mark are located in the middle projections of the floor. The service personnel shall check the nameplate when providing the service. Therefore, please do not lose the product nameplate and keep it clear.

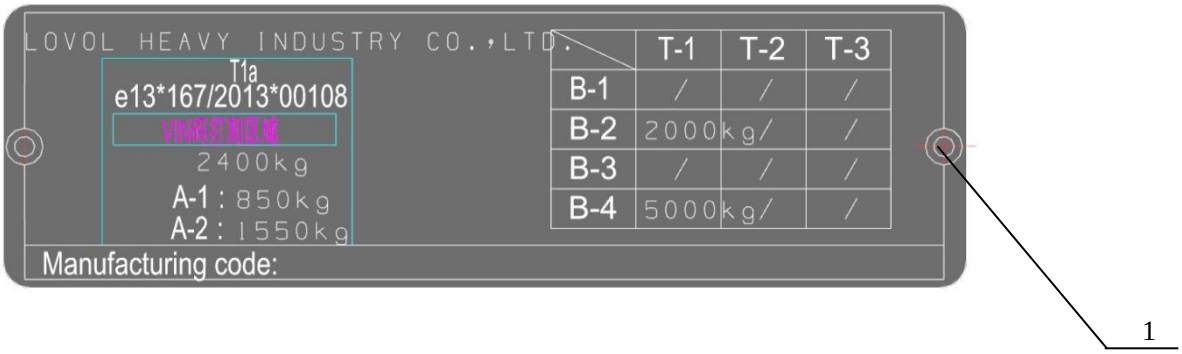

Fig.2-1 Product Nameplate

1 - Product nameplate

Engine information

The product nameplate of the engine is an important and effective identification mark of the tractor power supporting device. The product nameplate is located under the tractor hood, and the engine nameplate is located on the engine.The service personnel shall check the nameplate when providing the service. Therefore, please do not lose the nameplate and keep it clear.

Fig. 2-2 Engine Nameplate

Model and factory No. of complete machine

When the tractor leaves the factory, the model and factory No. of the complete machine are marked on the left side of the transmission housing, and the specific position is as shown in the figure.

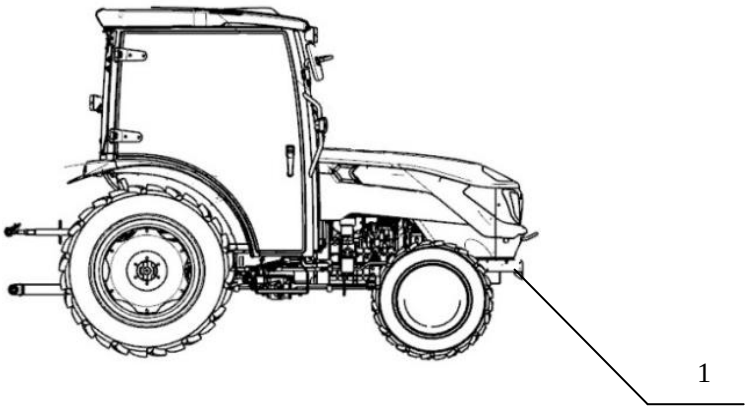

Fig. 2-3 Factory No.

1 - Factory No.

3. Operating Instructions

Note: Proper operation of tractors can give full play to the efficiency of tractors, reduce the wear of tractors, prevent accidents, and ensure operators to complete field and road operations with high quality, high efficiency, low consumption and safety.

Table 3-1 Common Identification Symbols

Symbol	Meaning	Symbol	Meaning	Symbol	Meaning
	Safety warning symbol		Four-wheel drive		Horns
	High-beam lamp		Low-beam lamp		Fast
	Engine oil pressure		Battery charging status		Slow
	Turn signal lamp indication		Washer		Position lamp
	Engine preheating		PTO switch		Windscreen wiper
	Air filter blocking alarm		Hydraulic oil filter		Air brake failure/fault
	Engine coolant temperature		Fuel level		Parking brake
	Differential lock		Hazard indicator lamp		Slewing alarm lamp
	Traffic safety indicator light		Steering and low pressure warning indicator light		DPF regeneration warning light

3.1 Product Description

This User Manual describes the use, technical maintenance, adjustment and troubleshooting of LOVO L TE and ARBOS TE series wheeled tractors. TE series wheeled tractors include TE4043C, TE4043R and ARBOS2040.

The LOVOL TE, ARBOS TE series wheeled tractor is a kind of multi-purpose medium-sized agricultural wheeled tractor, which is featured by compact structure, convenient operation, flexible steering, large traction force, wide application and convenient maintenance.

3.2 Tractor control mechanism and instrument

3.2.1 Tractor control mechanism

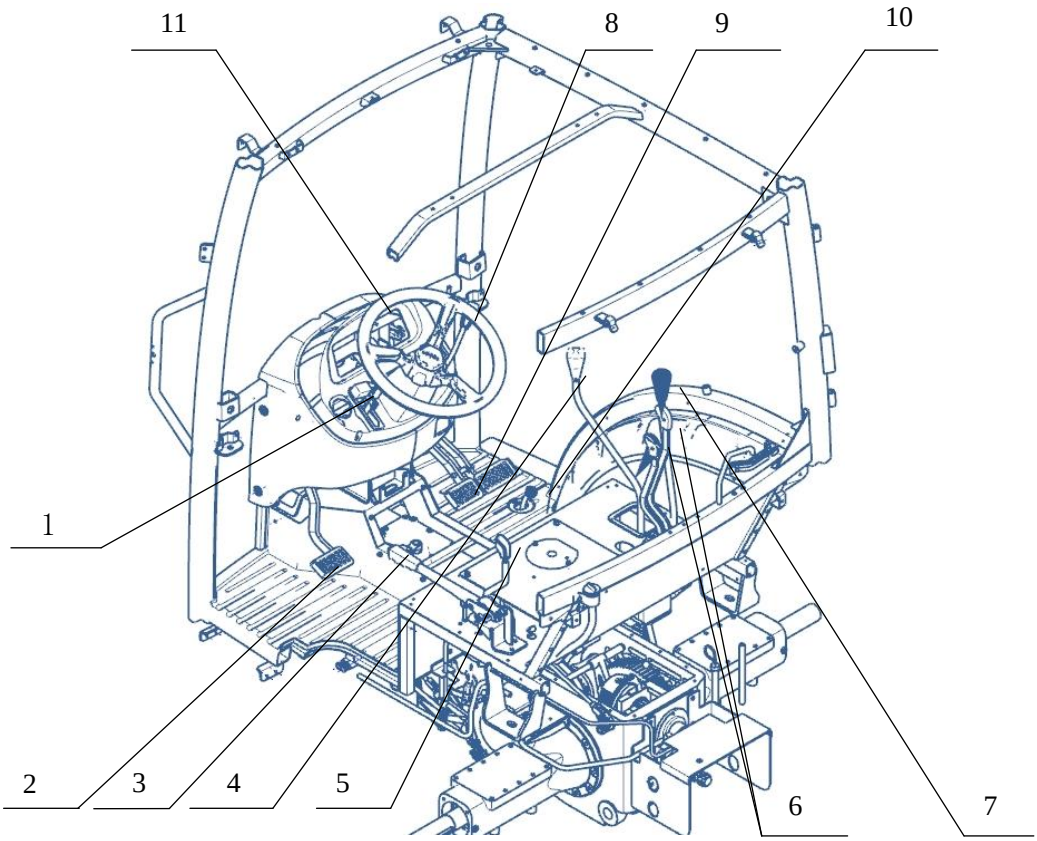

Fig. 3-1 Tractor Control Mechanism

1- Shuttle shift lever 2- Clutch pedal 3- Hand brake 4- Main shift handle 5-PTO shift handle 6- Multi-way valve handle 7- Auxiliary shift handle 8- Hand accelerator operation 9- Foot braking maneuver 10- Foot pedal accelerator operation 11- Steering wheel

3.2.2 Instrument and Switch

Combination instrument

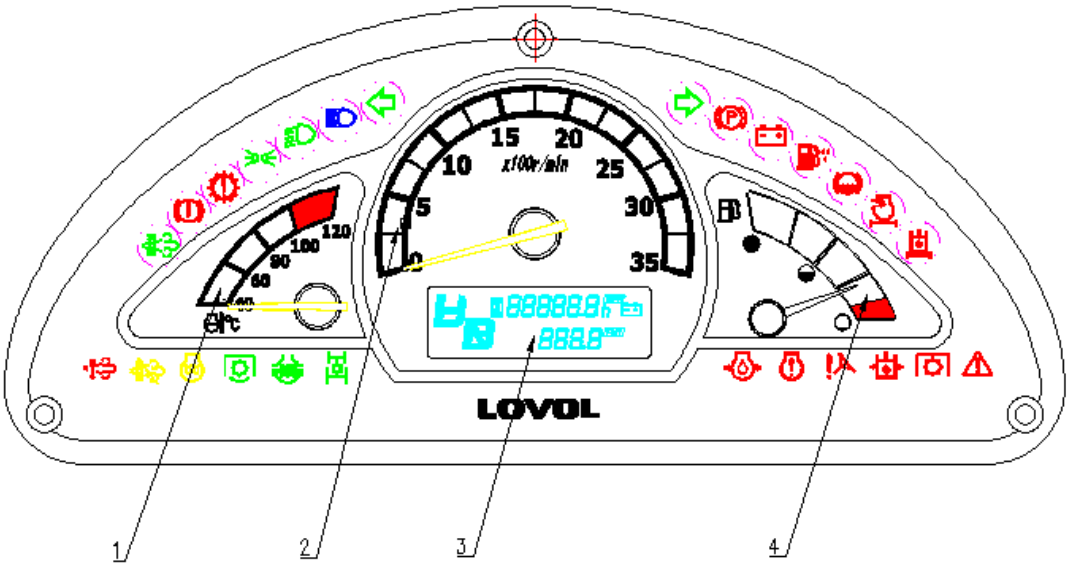

1. Water temperature gauge; 2. Tachometer; 3. Timer; 4. Fuel gauge;

Fig.3-2 Combination Instrument

The meaning of each indicator light of instrument, the specification and color of the indicator light

Mark / Feature	Turning Left	Turning Right	High beam	Position lamp	Preheat	Air brake	Charging indication	Low oil pressure alarm	Traffic safety	Turning Low voltage	parking brake
Color	Display color and symbol										
	Green	Green	Blue	Green	Yellow	Red	Red	Red	Red	Red	Red
specification	LED	LED	LED	LED	LED	LED	LED	LED	LED	LED	LED
	Each indicator light should be clearly visible under direct sunlight, and no blinding or dazzling feeling at night.										

Engine tachometer

After the engine is started, the indicated value refers to the working speed of the engine.

The value displayed in the box refers to the working hours of the engine.

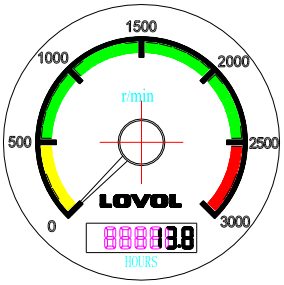

Fig. 3-5 Engine Tachometer

Coolant temperature gauge

Mark the engine coolant temperature value with scales, the pointer moves from left to right, where the red area is the high temperature area.

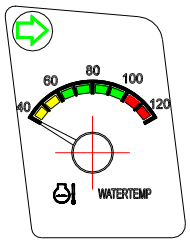

Fig. 3-6 Coolant Temperature Meter

Fuel gauge

The fuel gauge indicates the amount of oil in the fuel tank with scales. The pointer points to the rightmost position; Indicates that the fuel tank is full of fuel; if the pointer points to the red area on the left, indicates that there is insufficient oil in the oil tank, and it shall be refilled immediately.

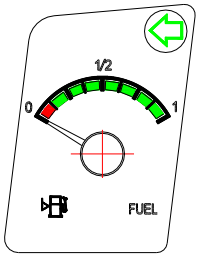

Fig. 3-7 Fuel Gauge

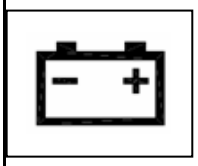

Charging indicator lamp (red)

When the power supply is turned on and the engine is not started, the light is on; if the light is not on, the light bulb or line fault shall be inspected and repaired; the light shall go out after the engine starts, indicating that the battery is charged normally. If the indicator lamp does not go out, the generator or voltage regulator and circuit shall be overhauled.

Fig. 3-8 Charging Indicator Lamp

Engine oil pressure alarm lamp (Red)

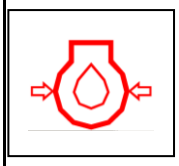

When the key is in the ignition position, the light is on; After the engine is started, the light shall go out, indicating that the lubrication system pressure is normal. When the engine is idling, the light may light up, because the pressure of the lubrication system is low during idling, which is a normal phenomenon. If the light lights up when the engine is at normal working speed, machine shall be stopped immediately for inspection.

Fig. 3-9 Engine Oil Pressure Alarm Lamp

Air pressure warning lamp (Red)

For models with air brake, when air pressure of the brake system is lower than 0.40MPa, the light will light up. It indicates that the brake air line is faulty or the air pressure alarm is broken and shall be overhauled. Turn on the key, if the engine is not started, the air pressure is insufficient and the light is in normal state.

Fig. 3-10 Air Pressure Warning Lamp

Important matters: before running the engine, turn the key to the ignition position. Check whether the above three lights are on. If on, there may be bulb damage or circuit failure, which shall be repaired in time.

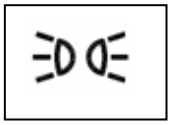

Position indicator (Green)

When the tractor running on the road at night is to be parked, in order to ensure traffic safety, the clearance light shall be turned on to remind drivers of vehicles in front and behind.

3-11 Position Indicator

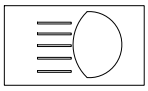

Headlamp high beam indicator (Blue)

When this light is on, it indicates that the high beam is turned on at this time.

Fig. 3-12 Headlamp High Beam Indicator

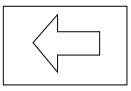

Left turn indicator (Green)

When the tractor turns left, turn on the left steering switch, and the light lights up.

Fig. 3-13 Left Turn Indicator

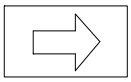

Right turn indicator (Green)

When the tractor turns right, turn on the right steering switch, and the light lights up.

Fig. 3-14 Right Turn Indicator

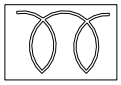

Preheating indicator (Yellow)

When the tractor warms up, the light goes on.

Fig. 3-15 Preheating indicator

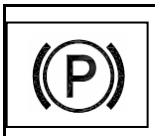

Parking brake indicator (Red)

When the handbrake is not pulled up, the light is on, and the alarm flashes at a frequency of 1Hz.

Fig. 3-16 Parking brake indicator

Steering low voltage warning lamp (Red)

When this light is on, it indicates low steering pressure of tractor.

Fig. 3-17 Steering Low Voltage Warning Lamp

Traffic Safety Indicator (Red)

The light is not on when the driver steps on the clutch pedal to turn on safety start switch and pulls the ignition lock to the Start position, and the engine is normally started on the condition that the driver is on the seat,the vehicle is in neutral position, the hand brake is pulled up, the PTO rocker switch is disconnected, and the control box is normally powered-on.

Fig. 3-18 Traffic Safety Indicator Light

The vehicle fails to be started, and the light is on and flashes at 1Hz when the driver starts the vehicle and the vehicle is not in neutral position;

The vehicle fails to be started, and the light is on and flashes at 2Hz when the driver does not start the vehicle from the seat;

The vehicle fails to be started, and the light is on and flashes at 3Hz when the driver starts the vehicle and the PTO rocker switch is not disconnected.

Parking brake warning indicator (Red)

This light is on when the tractor is parked and the handbrake pulled up.

Important matters: when the tractor is working, the driver shall always pay attention to all kinds of instruments and indicator lights, and shall park and overhaul immediately in case of abnormal situation.

Combination switch

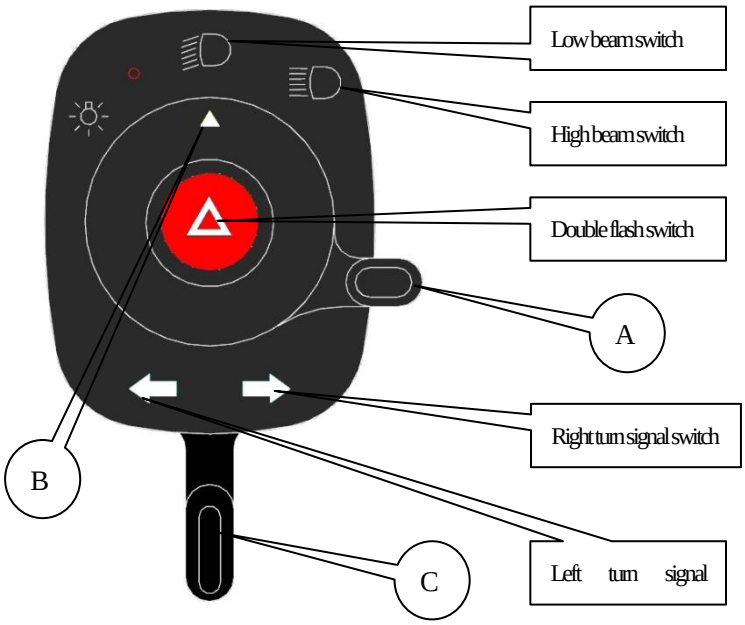

Fig. 3-19 Combination Switch

1. Knob A is used to switch on and off the high and low beam. When the knob A is being rotated, the switch corresponding to the position to which triangle B points is turned on.
   For example, in the position shown in the figure above, triangle B points to the low beam switch, and then the low beam switch is turned on, with the low beam of the entire vehicle on;
   If the triangular B points to the high beam switch, the high beam switch is turned on, the vehicle high beam is on, and the high beam indicator on the instrument is on;

2 When the vehicle is turning, the left and right turn lights shall be turned on as required.
   The left and right steering functions are controlled by knob C,
   Move knob C to the left to turn on the left turn switch. At this time, the front and rear left turn indicators of the entire vehicle are on, the left turn indicators on the instrument are on, and flash at a certain frequency;
   Move knob C to the right to turn on the right turn switch. At this time, the front and rear right turn indicators of the entire vehicle are on, the right turn indicators on the instrument are on, and flash at a certain frequency;

2. Press the double flash switch downward to turn on the double flash switch, At this time, the front, rear, left and right turn indicators of the entire vehicle are on, and the left and right turn indicators on the instrument are on, and flash at a certain frequency.

Lower rocker switch combination

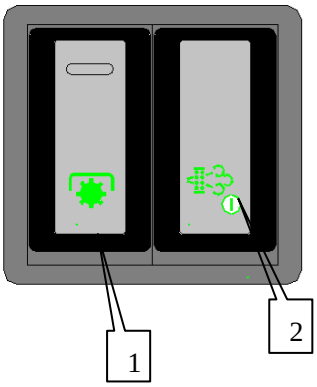

Fig. 3-20 Rocker Switch Combination

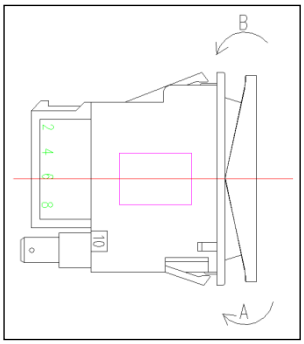

Fig. 3-21 Operation Method of Rocker Switch

S/N1: PTO switch, which has a built-in limit function. Press the limit downward, and press the switch downward in direction A as shown in the Fig. 3-21 at the same time to turn on the switch;

Press the switch downward in direction B as shown in the Fig. 3-21 to turn off the switch.

S/N2: park regeneration switch. After parking, press the switch and hold for 3s to turn on the DPF regeneration function;

Press the switch downward in direction B as shown in the Fig. 3-21 to turn off the switch.

Rocker Switch Combination on Instrument Panel on Models with a Cab

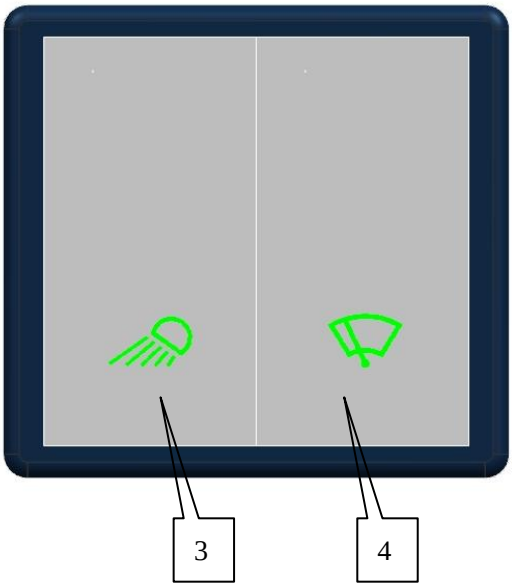

Fig. 3-22 Rocker Switch Combination

S/N3: work light switch. Press the switch downward in direction A as shown in the Fig. 3-21 to turn on the switch. At this time, the top light and rear light of the entire vehicle are all on;

Press the switch downward once in direction B as shown in the Fig. 3-21 to turn off the switch;

Press the switch once again downward in direction B as shown in the Fig. 3-21 to turn on the rear light of the entire vehicle;

S/N4: front wiper switch. Press the switch downward in direction A as shown in the Fig. 3-21 to turn on the switch. At this time, the front wiper works in high gear;

Press the switch downward once in direction B as shown in the Fig. 3-21 to turn off the switch. At this time, the front wiper stops working;

Press the switch once again downward in direction B as shown in the Fig. 3-21 to turn on the switch. At this time, the front wiper works in low gear;

Rocker Switch Combination on Instrument Panel on Models with Safety Frames

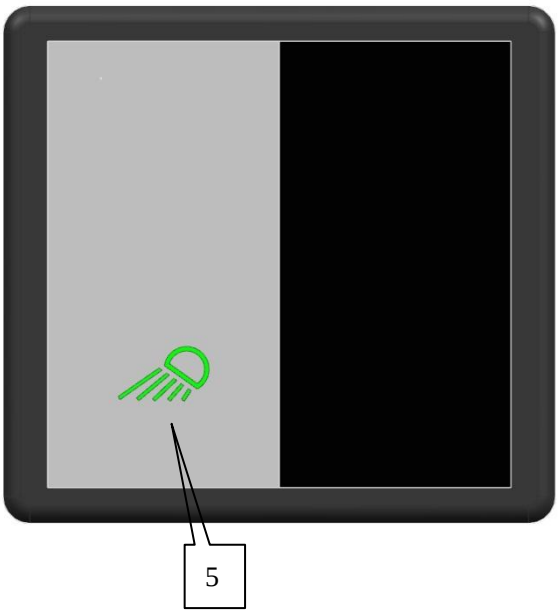

Fig. 3-23 Rocker Switch Combination

S/N5: work light switch. Press the switch downward in direction A as shown in the Fig. 3-21 to turn on the switch. At this time, the rear lights of the entire vehicle are all on;

Press the switch downward once in direction B as shown in the Fig. 3-21 to turn off the switch;

Press the switch once again downward in direction B as shown in the Fig. 3-21 to turn on the switch function. However the rear light of the entire vehicle is not on;

Horn switch

The horn switch is in the middle of the steering wheel. Press the horn button shown in the figure to turn on the horn switch.

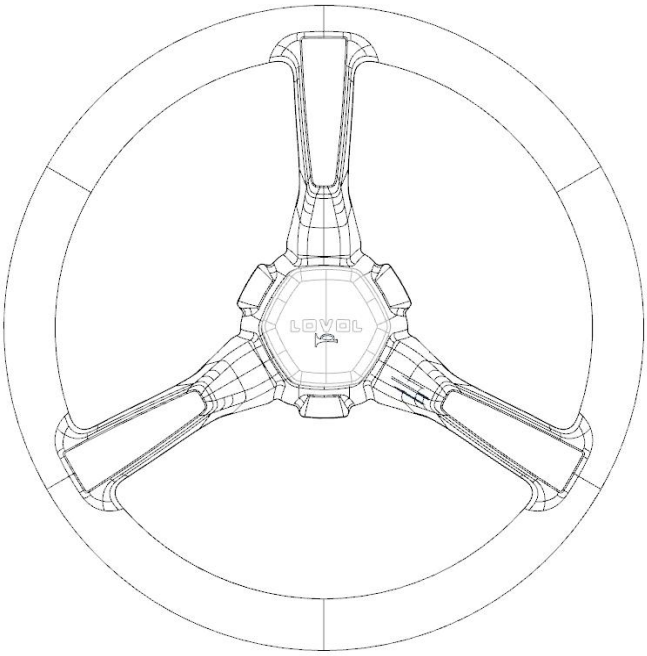

Fig. 3-9 Horn Switch

Ignition Lock

Turn the preheat starting switch clockwise to ACC position to turn on the auxiliary appliance, turn it clockwise to ON position to turn on the control circuit,and turn clockwise to H position to turn on the preheating device. After preheating, directly turn to ST position to start the engine. Release the hand immediately after the engine starts, The key returns to ON position automatically. The holding time in the starting position shall not exceed 5s, otherwise, the starter will burn out.

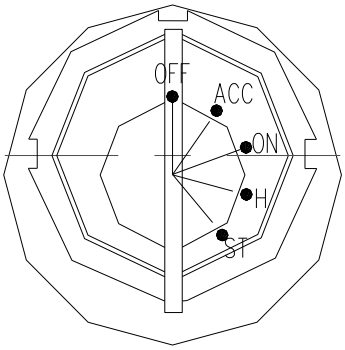

Fig. 3-10 Ignition Lock

3.3 Starting of Engine

Warning: Before use, a careful and comprehensive inspection of tractors can eliminate hidden dangers and effectively prevent accidents.

3.3.1 Preparation before Start

- Before startup, carefully check whether the connections of each part are tight and reliable and that the operating mechanism work normally. Check whether pipe joints of all parts are tightened and whether there is oil leakage, water leakage or air leakage.
- Check the lubricating oil level of engine oil sump, tractor transmission- rear axle and hydraulic system; the radiator of water tank shall be filled with sufficient cooling water, and there shall be enough fuel in the fuel tank.
- Turn the fuel line switch handle of the fuel tank to the forward direction of the fuel pipe to make the fuel line on;
- Check the transmission control lever and power output shaft control handle, put the main gearshift lever and power output

control handle and the front drive axle control handle in the neutral position, and put the distributor control handle in the descending position;

- Pull the shutdown cable locking device to loosen the shutdown cable. At this time, the fuel injection pump is in fuel supply position;
- Put the hand throttle in half-open state;
- Confirm that the PTO rocker switch in the lower right position of the instrument panel is not connected;
- Confirm that the handbrake is pulled up and the handbrake switch is in the free state (i.e. on-state);

- Confirm that the driver is sitting on the seat and the seat switch is turned on;
- For new tractors and those tractors that have been overhauled or have been left unused for a long time, the air in the oil line shall be exhausted before starting to ensure the smooth starting of the diesel engine. The method is as follows: First, loosen the air bleed screw on the filter, pump oil with the hand pump, and exhaust air from the fuel line between the fuel tank and the filter until there is no bubble in the discharged fuel. Then tighten the bleed screw of the diesel filter, loosen the bleed screw on the fuel injection pump, and bleed in the same way until there is no bubble in the discharged fuel.

Important:

1. The sundries in the mesh of water tank shall be cleaned regularly to avoid engine fault due to poor heat dissipation;
2. After the tractor is installed with the backpack harvester, the heat dissipation condition will be poor when working in the field. In order to ensure that the engine can work continuously for a long time, it is suggested to install an auxiliary heat dissipation device at the appropriate part of the tractor.

3.3.2 Start the Engine

Important matters:

1. Immediately after the engine is started, release the hand and allow the key to automatically return to "ON" position (see the picture of ignition lock); Otherwise, the started engine will reverse the starter and damage the starter;
2. The starting time shall not be more than 5s each time, and the starting interval shall not be less than 15s each time. In order to maintain the charging performance of the battery, the continuous starting shall not be more than 3 times. If the battery still fails to start for three consecutive times, the cause shall be ascertained before restart.

3.3.2.1 Start with Battery:

Be sure that the driver is sitting on the seat, the tractor is in neutral position, the hand brake is pulled up, and the PTO rocker switch is disconnected regardless of the temperature at which the vehicle is started.

- Cold starting under normal temperature{when the temperature is above -5℃ (Celsius degree)}: Since the tractor has a safe start switch, first step on the main clutch pedal, and turn the key clockwise to "ON" position to turn on the circuit, and then turn the key to "ST" position to start the engine; Release the hand

immediately after the engine is started. At this time, the key will automatically return to "ON" position.

- Preheat starting (only for models with preheat circuits):

Preheat starting can be used when cold starting is difficult at low temperature [-5℃ (Celsius degree) below]. Place the hand accelerator in the large throttle position, turn the starting switch clockwise to the "Preheat" position and hold for 10~15s, and then turn to the "ST" position to start the engine; Release the hand immediately after the engine is started. In this case, the key will rebound automatically. Then place the hand accelerator in the small throttle position again.

For tractors without preheating circuit, before starting the engine in severe cold weather, add hot water above 90℃ (Celsius) into the water tank, close the water drain valve at the water drain valve of the cylinder block, and then fill the whole cooling system with hot water. Drain the engine oil in the oil sump (it is best to drain it while it is hot during the last shutdown), put it in a container with cover and heat to (70~90)℃ (Celsius), and then add it into the oil sump. Do not bake the oil sump with fire.

3.3.3 Running of the Engine

- Immediately after starting the engine, reduce the throttle to idle the engine, check the engine oil pressure at this time, and ensure that the pointer of the oil pressure gauge point is between 0.25 and 0.4. Stop the engine and check it in the case of too high or too low oil pressure.
- After the engine is started, it shall not be operated at full load immediately, but shall be heated at medium speed and unloaded. The engine is not allowed to increase to the highest speed and put into full load operation until the coolant temperature reaches above 60℃ (Celsius).
- The speed and load of the engine shall be slowly increased or decreased, especially for the newly started engine, it is not allowed to run at high speed by slamming the throttle.
- Check the oil pressure and coolant temperature frequently while the engine is running.

Important matters: When the engine is running, the oil pressure indicator on the instrument shall not light up; Find out the cause and troubleshoot in time otherwise.

3.4 Starting of Tractor

- When the engine is in low-speed state, depress the clutch pedal and then shift the transmission shift lever to the required gear.
- Put down the parking brake handle.
- Honk the horn and observe whether there are obstacles around the vehicle.
- Gradually increase the engine speed and slowly release the clutch pedal to make the tractor start smoothly. After starting, the clutch pedal shall be released quickly to avoid slipping of the clutch.
- Gradually increase the throttle to make the tractor reach the required working speed.
- In use, it is not allowed to use the method of half-engaging clutch to reduce the running speed of tractor. Do not keep your feet on the clutch pedal while driving, so as not to accelerate the wear of the release lever and lining.

Important: In order to prevent the transmission drive gear collision and early damage to the clutch,high-gear starting is strictly prohibited. Be sure to release the parking brake before starting to avoid damaging its working parts.

3.5 Steering of Tractor

3.5.1 When the tractor is turning on the road, operate the horn switch on the steering wheel arm first, sound the warning, and then start turning; In the case of tractors traveling at high speed, slow down first. For smooth bends, turn early and slowly, and rotate and return the wheel within smaller range. For sharp bends, turn late and quickly, rotate and return the wheel within larger range.

3.5.2 When a tractor make small turns on soft soil, the steering will be ineffective because the front wheels will slip. When turning the steering wheel, step on the brake pedal on the corresponding side to help steering.

Warning

1.In the case of tractors traveling at high speed, using unilateral system for sharp turns is absolutely forbidden. When the front wheels turn at a large angle, in case of a squeak when the safety valve is in action, the steering wheel shall be retracted a little to avoid the accident caused by long-term overloading of the hydraulic steering system;

2. Before turning or reversing in field operation, the working parts of agricultural machinery buried must be lifted out of the ground to avoid damaging the farm implements or causing casualties.

3.6 Shift of Tractor

3.6.1 8+8 shuttle gear:

- The main and auxiliary transmission are operated by 1 control lever respectively to achieve the operation of 8 gears. Four gear levels (1, 2, 3, 4,) can be obtained by operating the main shift lever, 2 speed zones (L refers to low speed zone while H high speed zone) can be obtained by operating the auxiliary shift lever B.
- Step on the clutch pedal, operate the auxiliary shift lever, and push it down from the neutral position to get the high gear H. Or lift it up to get the low gear L.
- Step the clutch pedal, push the main shift lever from the neutral position to the first gear, and pull backward to the second gear; move to the left from neutral position and then backward to the third gear, and to the fourth gear if moved forward.
- If your tractor is equipped with an optional shuttle gear, a shuttle shift handle can be added above the left of the instrument panel to achieve forward gear and reverse gear by pushing it forward and pulling it backward respectively. When the forward and reverse gears are combined with the main and auxiliary shift levers (the reverse shift of main shift lever is canceled) 8 forward gears and 8 reverse gears can be obtained.
- Correct selection of tractor working speed can not only obtain the best productivity and economy, but also prolong its service life. Tractors shall not be overloaded frequently when working, the engine shall have a certain power reserve. The working speed for tractor in field shall be selected to make the engine work under about 80% of load. When the tractor works under light load and the working speed is not high, a higher gear and small throttle operation can be chosen to save fuel.

3.7. Operation of Differential Lock

Operation of Differential Lock

When the tractor is stuck or skidded on one side drive during driving or operation, the differential lock can be engaged according to the following steps, so that the left and right drive shafts are rigidly connected and can drive out of the skidding area at the same speed.

- Press the pedal of the main clutch, and operate the shift lever to engage in low gear.
- Turn the throttle lever to the maximum oil supply position.
- Press the differential lock and push the differential lock lever A located at the lower right of the driver's seat forward by hand.
- Loosen the clutch pedal smoothly to start the tractor smoothly.
- After driving out of the slipping section, pull the differential lock lever A back to return it to its original position.

Important matters: during normal driving and turning of tractor, it is forbidden to use differential lock, so as not to damage parts and accelerate wear of tires.

3.8 Use of front Drive Axle

LOVOL TE, ARBOS TE series wheeled tractors are appropriate for field heavy load operations or working on wet and soft soil. If driven only by the rear wheels, the traction performance of the tractor may be insufficient. At this time, the coupling of the front drive axle can increase the traction force of the tractor and reduce the slip rate, thus improving the operation adaptability of the tractor. To facilitate engagement and disengagement of the front drive axle, the following operating procedures shall be observed:

Coupling of front drive axle

Depress the main clutch pedal, shift the gear of the transmission, and then slowly release the clutch pedal. When the tractor moves slightly, pull the front drive axle handle upward in time to change the two-wheel drive into four-wheel drive.

Disconnection of the front drive axle

To disconnect the front drive axle, step on the main clutch pedal and push down the front drive axle control handle to separate the front drive axle.

Important: The tractor is not allowed to engage the front drive axle during general transportation on hard road, otherwise it will cause early wear of the front tires and increase fuel consumption. Only when the road surface is slippery in rainy and snowy weather, and the rear wheels on the upper slope are easy to slip, can the front drive axle be engaged. When the tractor leaves the difficult section, the front drive axle shall be disengaged;

3.9 Braking of Tractor

3.9.1 Braking of Tractor

- Under normal circumstances, the accelerator shall be reduced first, the clutch pedal shall be depressed, and then the brake pedal shall be gradually depressed according to the situation to make the tractor stop smoothly.
- During emergency stop, the clutch and brake pedal shall be depressed at the same time, and the brake pedal shall not be depressed alone, so as to avoid rapid wear of brake friction plates or engine shutdown.
- To brake the trailer attached, adjust the length of the brake valve lever to brake the trailer before braking the main engine.

Warning:

1. Ensure that the brake works normally before dispatching the vehicle each time.Otherwise major accidents such as brake failure will occur;

2.When the tractor is running on the road, be sure to interlock the left and right brake pedals to prevent the tractor from deviating or even rolling over during braking, causing casualties.

3.10 Tractor parking and engine shutdown

3.10.1 Tractor parking and engine shutdown

- Reduce throttle and tractor running speed.
- Depress the clutch pedal and brake pedal at the same time, and after the tractor stops, put the transmission shift lever in neutral position.
- Loosen the clutch and brake pedal, and reduce the throttle to idle the engine.
- Pull the transmission shift lever backward to close the tie rod and stop the oil pump from supplying oil. In this case, the engine will immediately stop. Pull back to the oil supply position.
- Turn the starting switch key to the "OFF" position and turn off all power supplies.

3.10.2 Operation with Machines and Tools

- During the operation with machines and tools attached, the following functions are added to this model for safety. In the case of the tractor in the neutral position, after the driver leaves the seat, the PTO rocker switch on the instrument panel is still on. After 5S, the PTO auto power-off mode of the tractor starts, and the PTO no longer outputs power.
- After the auto power-off mode is turned on, when the driver returns to the seat again, the PTO rocker switch on the instrument panel shall be disconnected and then turned on again before the PTO can work again.

Fig. 3-26 Position of PTO Rocker Switch

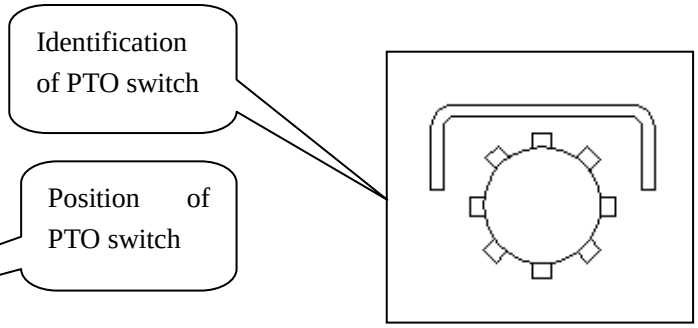

Fig. 3-27 Identification of PTO Rocker Switch

3.11 Use and Disassembly of Tire

3.11.1 Use of Tire

- Tire is an important part of tractor, please pay attention to the use and maintenance of tire to prolong its service life as much as possible.
- Tires have specified load value. Overload will lead to excessive deformation of tires, excessive bending of sidewalls and easy breakage. The fabric and buffer layer of tire body are also easy to degum, making the fabric layer loose until the tires break, especially when the road surface is uneven or impacted by obstacles.
- The tire inflation pressure must comply with the regulations. The service life will be affected by too high or too low inflation pressure. Too low air pressure can easily cause excessive tire deformation, accelerate tread wear, and even make the tire quickly crushed and have the valve cut off; It also increases driving resistance. If the front tire pressure is too low, the operation will be strenuous; if it is too high, it will excessively stretch and break tire fabric, accelerate the tread wear, and increase the vibration of the tractor body. The tire pressure shall be appropriately lowered when working in field, while appropriately raised for long-term road transport. Tire pressure shall be checked with a barometer at normal temperature to avoid inaccurate measurement due to tire heating after operation. Improper driving operations can also cause early wear or damage to tires. Driving across obstacles at high speed, braking hard or turning sharply shall be avoided when driving the vehicle. When driving on gravel road, try to avoid tire slipping.
- During use, do not touch the tires with chemical corrosion products such as oil, acid or alkali, and try to avoid exposure to the sun to avoid aging and deterioration of rubber.
- Front wheel alignment and toe-in shall also be checked regularly to avoid eccentric wear of tire. When the tire pattern is worn unevenly, the left and right tires can be exchanged for use.

Important matters: the inflation pressure of front and rear tires of four-wheel drive tractor shall be the same to prevent abnormal tire wear.

3.11.2 Removal and Installation of Tires

Tyre dismounting

Professional tire charger or professional manual tire mounting equipment shall be used for tire removal and installation. Knocking and beating with sharp and hard tools (such as screwdriver) and sledgehammers is strictly prohibited, so as to avoid puncturing the tire or damaging the bead and rim.

During removal of the tire, deflate the tire first, and then push the bead toe away from the rim edge with a special tool, and then use the cup grease to lubricate the bead toe and rim edge fully, and finally use professional equipment to remove the tire. The removal process ends.

Non-compliance and brutal operation of any kind is strictly prohibited.

Cup Grease

Manual Removal Equipment

Installation of tires

- Before installation, fully lubricate the bead toe and rim with the cup grease used for fitting of tires;
- In order to ensure that the bead toe can fall correctly on the rim bead seat, the inflation pressure can be appropriately raised during inflation (but not greater than 0.25MPa), and adjusted to 0.16MPa after the bead seat is fully in position;
- Finally, check whether the position of the valve is skewed and whether the tire bead and rim are closely attached, and whether the ring fits tightly with the bead.

Warning: It is strictly prohibited to remove the connecting bolts between the tire, the drive hub and the rim during inflation, otherwise it may fly out and hurt people.

3.12 Use of Counterweight

The counterweight shall be increased or decreased based on the operating requirements of tractors. The counterweight shall be added when there is need to increase the traction during dry field operations and transportation operations; While the tractor is used in the mountainous and hilly land, the front counterweight shall be increased appropriately to avoid "head tilting" during operation.

The rear counterweight is a circular iron casting with a mass of 31kg per piece. Two pieces can be installed on the left and right sides respectively, with the gross mass of 124kg. Each piece of front counterweight is 10kg, and 8 pieces of them can be installed, with the gross mass of 80kg.

Note: Before the rear wheel with rear counterweight is removed from the tractor, the rear counterweight shall be removed from the tire first, so as to avoid casualties caused by instability.

3.13 Adjustment of Driver’s Seat

1. Driver's seats of TE series tractors can be adjusted forward and backward. During adjustment, pull the adjustment handle below the left side of the driver's seat outwards (as shown in the Fig. 3-13) and move the driver's seat forward or backward at the same time. After adjusting it to the required position, release the adjustment handle.

2. Adjust the stiffness of driver's seat with the handle based on the driver's height and weight to ensure the comfort of the driver.

3. Adjust the height of driver's seat with handle C based on the driver's height to ensure the comfort of the driver.

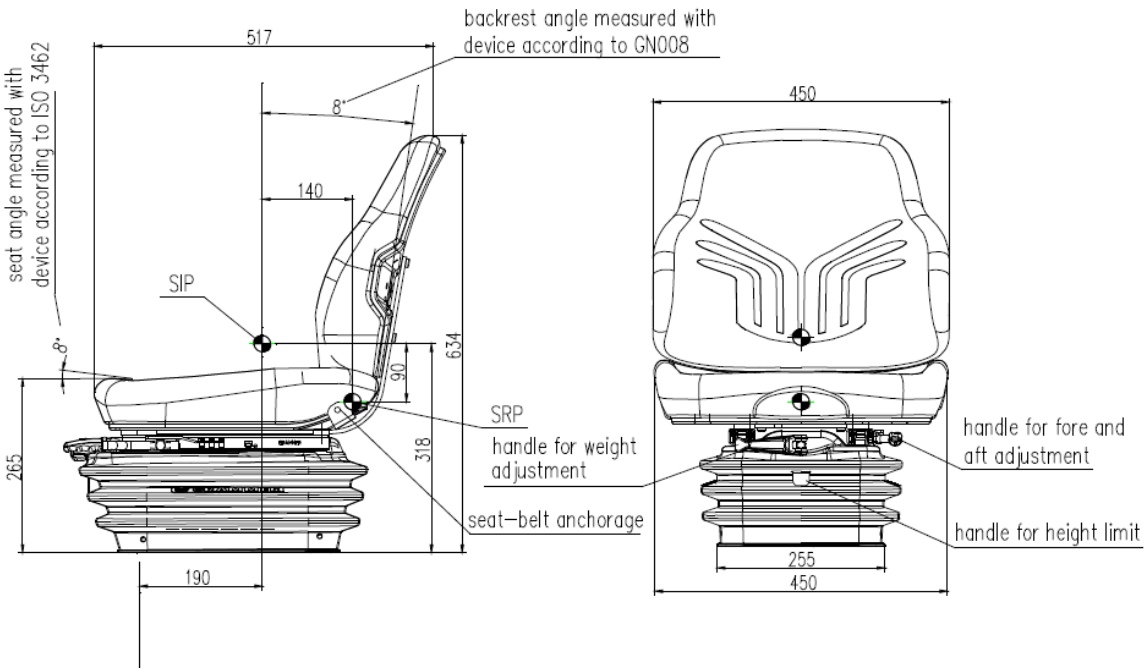

Fig. 3-13 Adjustment of Driver’s Seat

Note: For safety reasons, seat adjustment must be made when the tractor is in stationary state.

3.14 External Structure of Tractor

The external structure of tractors mainly includes an engine hood, a cab, a mudguard, an instrument panel, a floor and accessories.

3.14.1 Engine Hood (usage of special tools for opening the hood)

The engine hood is of gracefully streamlined sheet metal structure. To open the hood, insert the special hood opening pull rod and screw it in clockwise. Pull the locking handle on the left side of the lower coaming of the hood upward. Then the hood will open automatically under the action of the gas spring. Pull down the hood to a specific position. Then the hood can close and lock itself automatically. Then rotate counterclockwise to remove the special pull rod, and keep it properly.

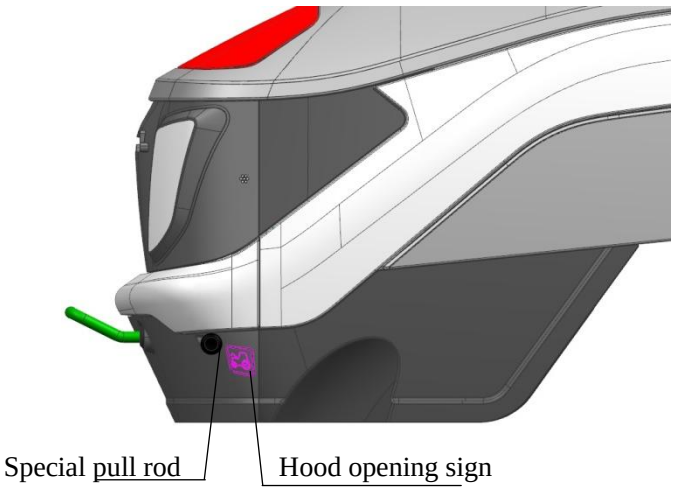

3.14.2 Dashboard

The electric control switch and combination instrument of the tractor are mounted on the instrument panel. The instrument panel is not only the installation position of the control switch,

but also serves as decoration and sealing.

3.14.3 Cab (optional)

Tractor cab consists of frames and glass. The frame is welded by section steel pipes and then installed with curved glass.

3.14.7 Arrangement and Usage of HAVC

● Overall arrangement of HAVC

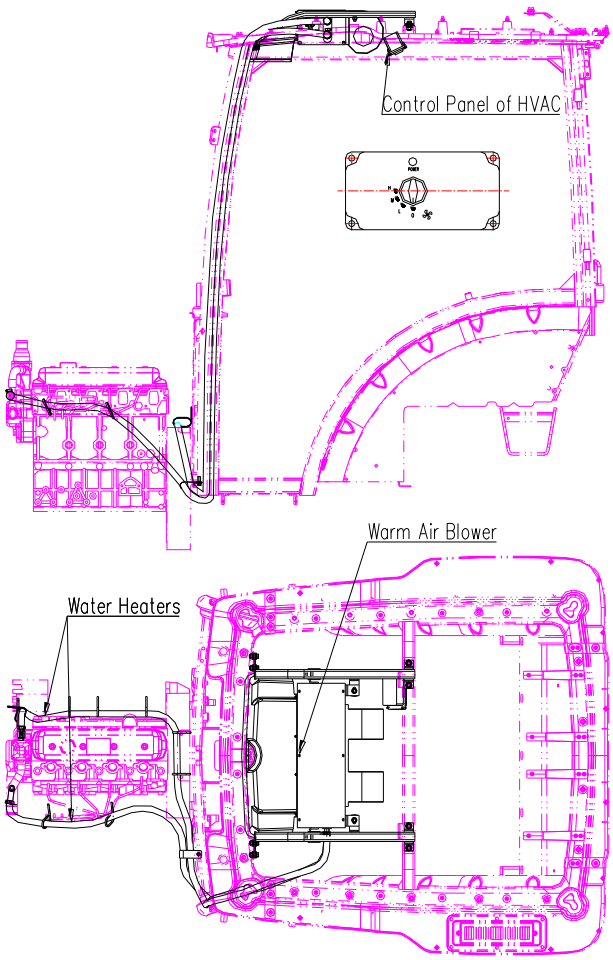

Fig. 3 - * Overall Arrangement of HAVC

- Turn on the water inlet and outlet switch of the heating on the engine (located on the engine but it differs in the position among different models). Then the hot water flows into the warm air blower, generating the hot air in the cab and raising the indoor temperature.
- There is a speed regulating switch on the control panel; Turn the adjustment knob of air speed in the middle of the control panel, select a certain speed position, the heater starts to work, and the air conditioner outlet blows warm air.

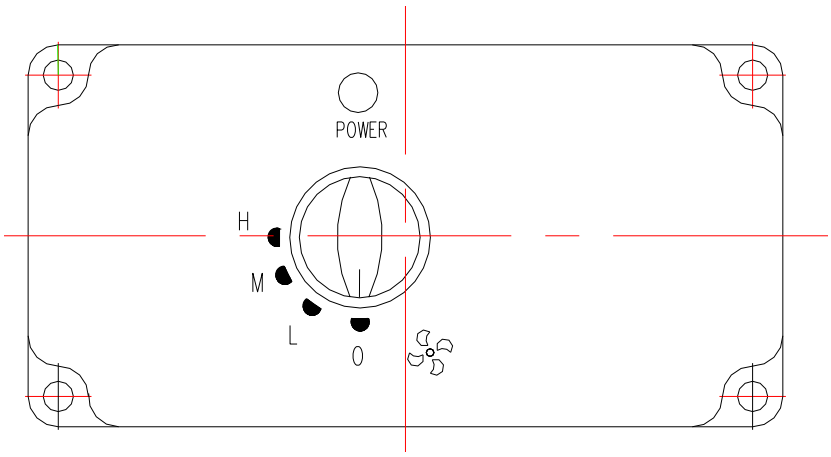

Fig 3-* Schematic Diagram of Heating Control Panel

3.14.8 Rollover Protection System (ROPS)

1. The ROPS of the tractor is a frame welded by rectangular pipes, which can flip backward and fold.

2. The ROPS can be installed in the middle of the tractor, which can slide forward and fold.

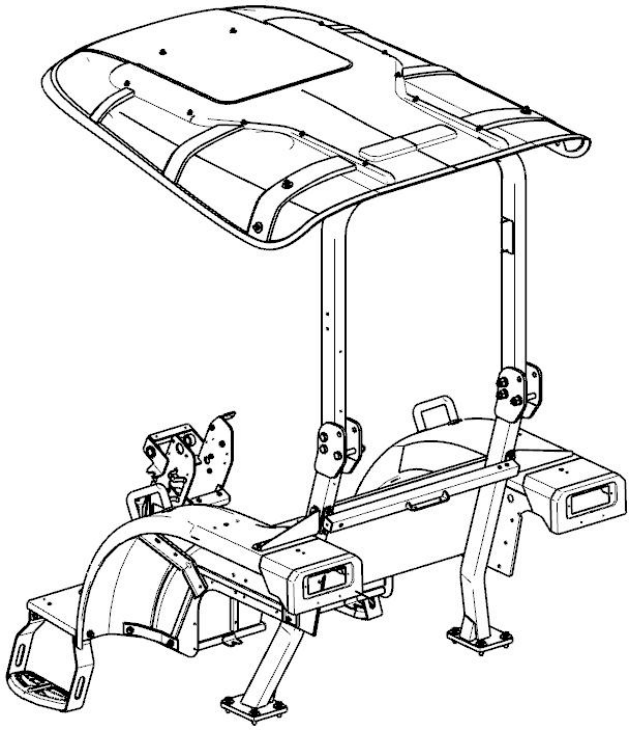

(Normal state)

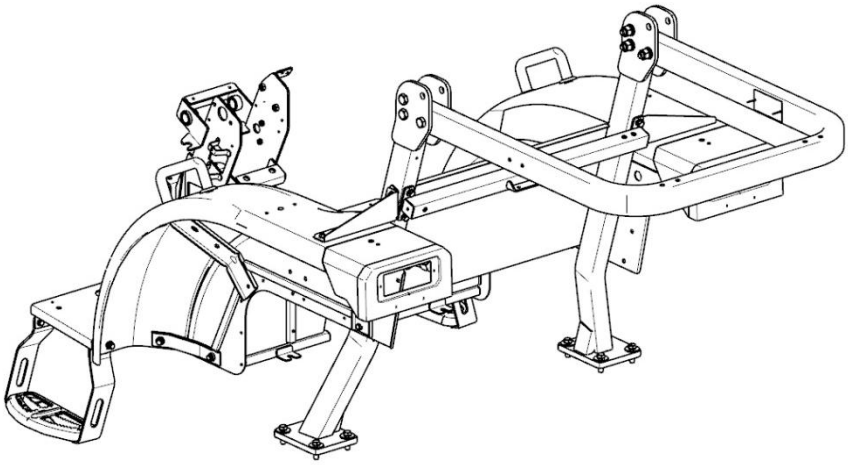

(folded state)

Fig. 3-14 ROPS

Warning:

1.When folding the safety frame, ensure the tractor is on a flat road, and please pull up the parking brake handle, stop the engine and pull out the key;

2. Fold ROPS (rollover protection mechanism) only when absolutely necessary, such as through buildings, orchards or vineyards. Unfold it again and lock it immediately after passing those areas or finishing the corresponding work. Untimely unfolding may cause accidents such as a rollover, resulting in loss of personnel and vehicles.

3.14.9 Lubrication points (maintenance every 50h)

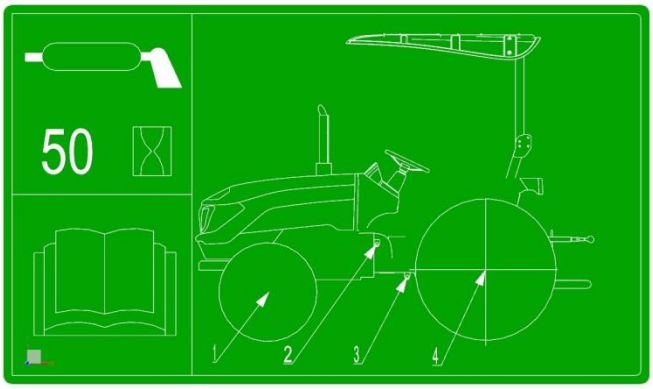

Safety frame model

1. Front axle 2. Brake clutch pedal shaft 3. Brake clutch rotation shaft 4. Rear axle

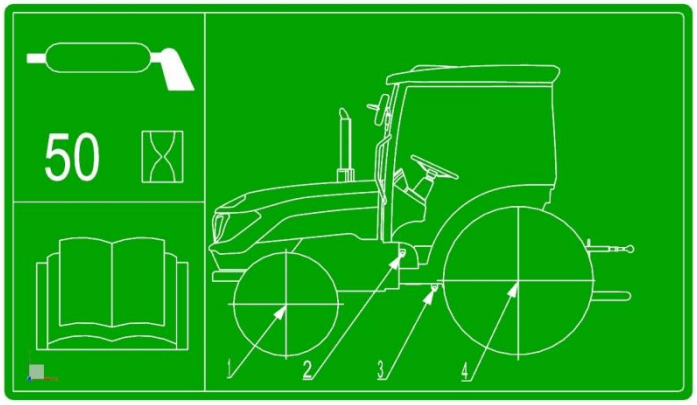

Cab type:

1. Front axle 2. Brake clutch pedal shaft 3. Brake clutch rotation shaft 4. Rear axle

3.14.10 How to Pull Tractors

When the tractor gets stuck in mud or breaks down and needs to be towed, it can be achieved by using the front towing lug of the tractor, connecting the front towing lug of the tractor and the tow tractor with reliable and firm wire ropes or other ropes of sufficient strength, and locking pin 1 to ensure safety.

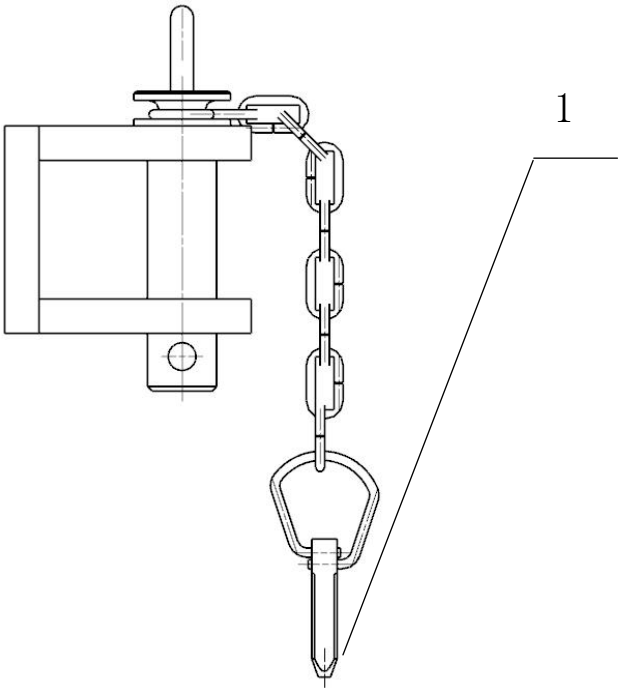

3.14.11 Master power switch

The main power switch is located in front of the tractor battery, as shown in the figure. Since the switch is of mechanical structure,the switch shall be turned from ON to OFF position in the direction indicated by the arrow when the tractor is not in use to prevent the battery from discharging.

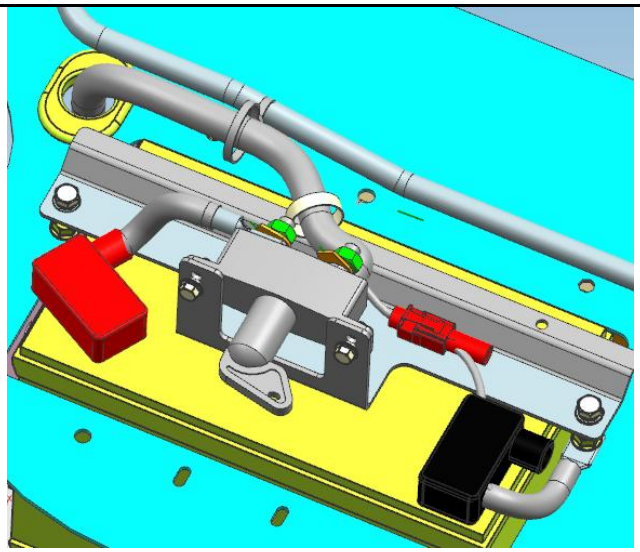

3.15 Use of Tractor Working Device

The semi-split hydraulic lifting system is adopted for TE series tractors and provided with two adjustment modes: position adjustment and height adjustment. The lifting and lowering of farm implements are achieved by operating the control handle of the distributor. Press the handle forward to lower the farm implements; Pull the handle backward to lift the farm implements. Refer to "Adjustment of Hydraulic Lifting System" for the adjustment of the highest and lowest lifting positions of farm implements.

3.15.1 Level Adjustment

The position adjustment is used when the farm implements without land wheels are hook by the tractor for farming. The tillage depth of farm implements is determined by the position of the lowering stopper on the return push rod. When used, the lowering stopper is fixed to the preselected appropriate position, so that the farm implements can fall to the required tillage depth. At this time, the stop pin touches the lowering stopper, the handle is pushed back to the neutral position, and the farm implements stop falling and will work at this tillage depth (refer to "Adjustment of Hydraulic Lifting System" for the adjustment method).

3.15.2 Height Adjustment

The height adjustment is used when the farm implements with land wheels are hook by the tractor for farming. The tillage depth of farm implements is controlled by adjusting the height from the land wheel to the ploughing sole. The lowering stopper shall be adjusted to the lo lowest lifting position when used, and the handle is still in the lowering position when the farm implements are lowered to the required tillage depth (refer to "Adjustment of Hydraulic Lifting System" for the adjustment method). Farm implements will work at the tillage depth.

Note: The position of the two return stoppers on the push rod is adjusted according to agronomic requirements and farm implements equipped when they are used. The lifting height of farm implements varies with the different position of the stopper on the push rod. The lifting and lowering height of farm implements are controlled by the lifting and lowering stoppers respectively.

3.15.3 Adjustment of Lowering Speed

Adjust the descent speed to control the lowering speed of farm implements. Choose proper lowering speed of farm implements to prevent the farm implements from being damaged due to severe impact when they contact the ground. The lowering speed regulating valve has been preliminarily adjusted before delivery. Driver can readjust the descending speed according to the severity of the farm tools and the hardness of the ground.

- The lowering speed of farm implements will be slowed down by rotating the adjustment knob A clockwise;
- The lowering speed of farm implements will be increased by rotating the adjustment knob A anticlockwise; (refer to Fig. 3-15).

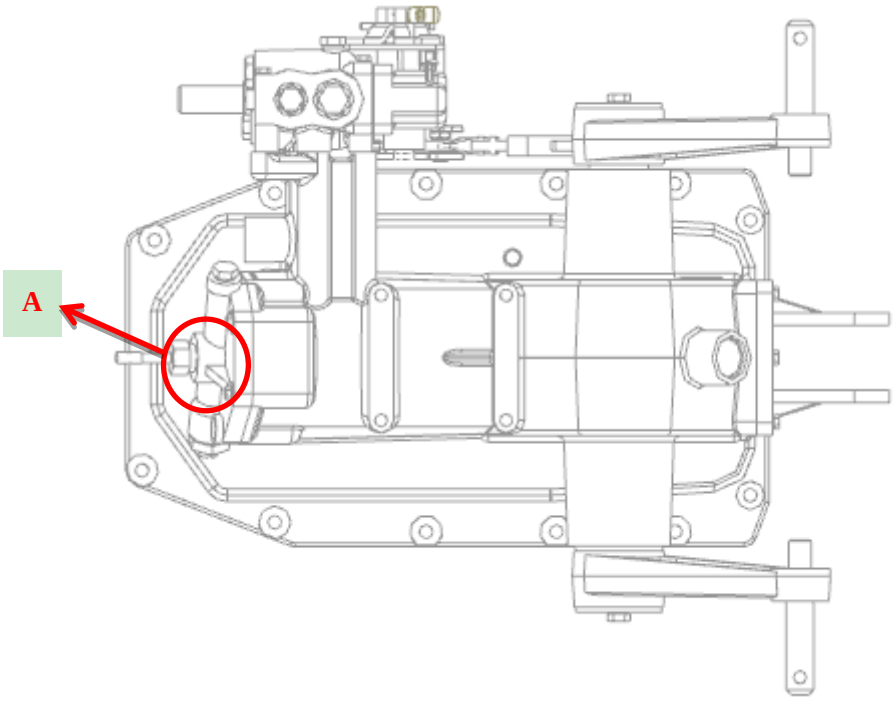

Fig. 3-15 Adjustment of Lowering Speed

3.15.4 Use of Multiway Valve Hydraulic Output Device

The tractor may not be equipped with one or two slide valve type hydraulic output multi-way valves as required. The two valve plates are operated by two operating handles C and D respectively to control two dual-acting cylinders on the machine tool. An oil inlet and an oil return port of the multi-way valve are respectively connected with a gear pump and a lifter, and an oil outlet is connected with an oil inlet of distributor. Each control valve has two NPT1/2 quick-change female connectors 1+, 1- (red) and 2+, 2- (blue) (as shown in the figure), which are sealed with a sealing cover when not in use. When in use, connect the spare male connector (placed in the spare parts box) with the oil inlet and outlet of the oil cylinder of the hydraulic farm implement, and then connect it with the quick-change female connector. Handle "C" controls the first hydraulic output 1+ and 1-(red), and handle "D" controls the second hydraulic output 2+ and 2-(blue). If a single-action cylinder is connected, the oil pipe of the cylinder shall be connected to the first output 1+ (red) or the second output 2+ (blue). Operate the control handles "C" and "D" upwards and downwards, the single-acting or dual-acting oil cylinder will complete the corresponding actions. Both hydraulic output valves can achieve single-action hydraulic output or double-action hydraulic output by screwing in or unscrewing the single and double action conversion screw "E" on the multiway valve (as shown in the figure). Loosen and take off the screw "E" counterclockwise to achieve a single-action hydraulic output. Conversely, screw "E" completely in to achieve a double action hydraulic output. When using the hydraulic quick-change connectors for connection, the following work shall be completed before inserting the male connector on the farm implement into the female connector:

- Shut down the engine;
- Lower the suspended farm implements;
- Move the control handle of the hydraulic output valve back and forth to eliminate the pressure in the hydraulic quick-change female connector;
- Remove the sealing cover of the quick-change female connector and clean the quick-change connector.

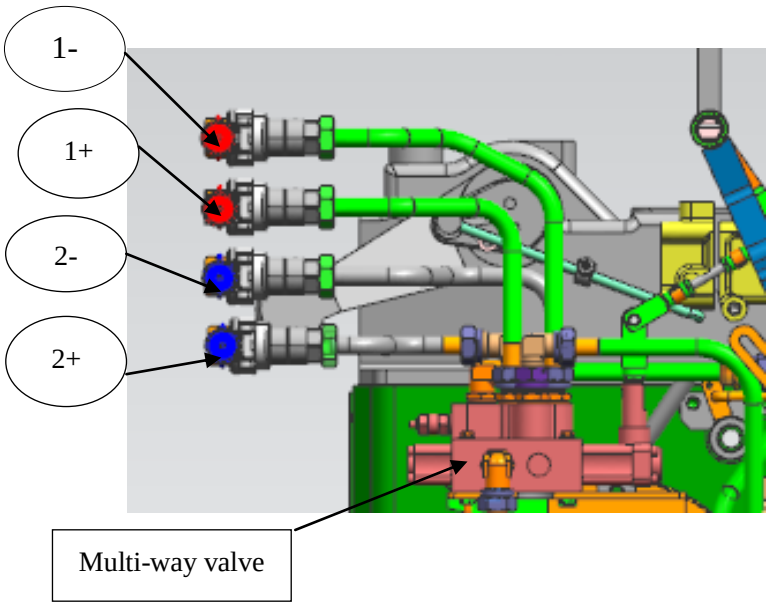

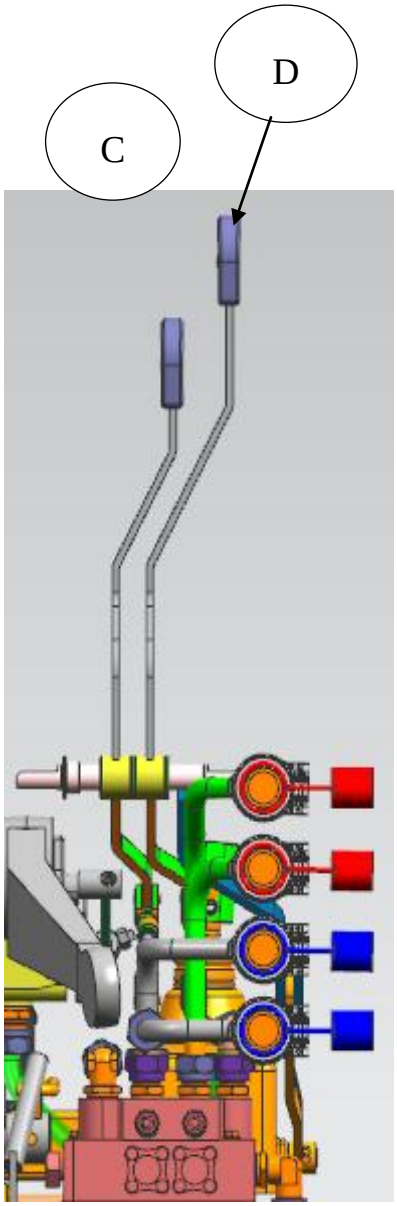

Multi-way valve assembly

1 - Single and double action conversion screw "E"

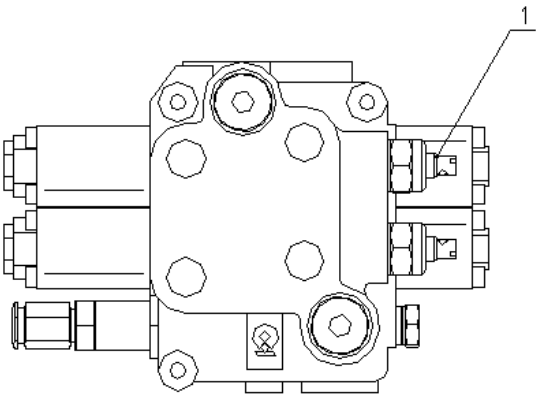

Important:

1. In case that the hydraulic output device is not in use, the joint seat shall be covered with a sealing cover to avoid dust.

2. Lifter and hydraulic output valve cannot be used simultaneously;

3.After the hydraulic output device is operated, the control handle shall be placed in neutral position. Otherwise it will cause the hydraulic system to overheat.

3.15.6 Use of Suspension Mechanism

During the plowing operation, the longitudinal and transverse adjustment of the plow shall be made to ensure the consistent tillage depth of the front and rear plow-shares.

- Longitudinal adjustment: Adjust the length of upper pull rod A to keep the plow frame longitudinally horizontal to achieve the same tillage depth among plow-shares. When the front plow-share makes deeper tillage depth, the rear plow-share shallower or the plough heel leaves the bottom of the ditch, the upper pull rod shall be extended; when the front plow-share makes shallower tillage depth, the rear plow-share deeper or the plough heel compacts the bottom of the ditch, the upper pull rod shall be shortened.
- Horizontal adjustment: Adjust the length of the left and right lifting rods to keep the plow frame horizontal. As the right lifting rod B extends, the tillage depth of the first plow-share increases; As the right lifting rod shortens, the tillage depth of the first plow-share becomes shallower. Generally, the left lifting rod C is not adjusted, and the left lifting rod is adjusted only when the right lifting rod is not adjusted enough to keep tillage depth consistent.

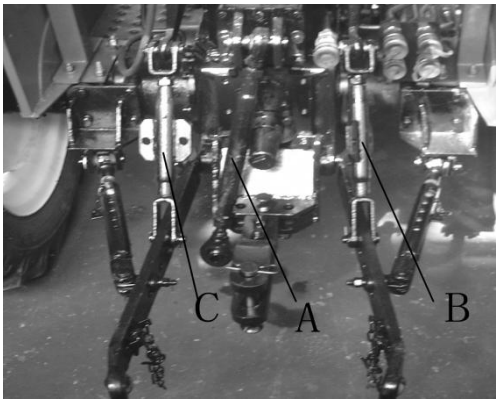

Fig. 3-18 Suspension Mechanism

Important:

1、 During ploughing, adjusting the deflective traction of farm implements by fixing limit rods is strictly prohibited to avoid damaging the suspension mechanism;

2、 Turning the tractor when the farm implements are unraised during ploughing is strictly prohibited, so as not to damage the suspension mechanism. The tractor can only be turned after plough-shares are unearthed.

Note: The limit rod is mainly used to prevent the lower pull rod from swinging too much and hitting the rear wheel of the tractor when the tractor is turning with farm implements being lifted from the ground. When the farm implement is in the plowing position, the limit rod is in a relaxed state, allowing a certain amount of swing between the tractor and the farm implements.

3.15.7 Dimensional Drawing of Suspension System [Unspecified dimension unit: mm]

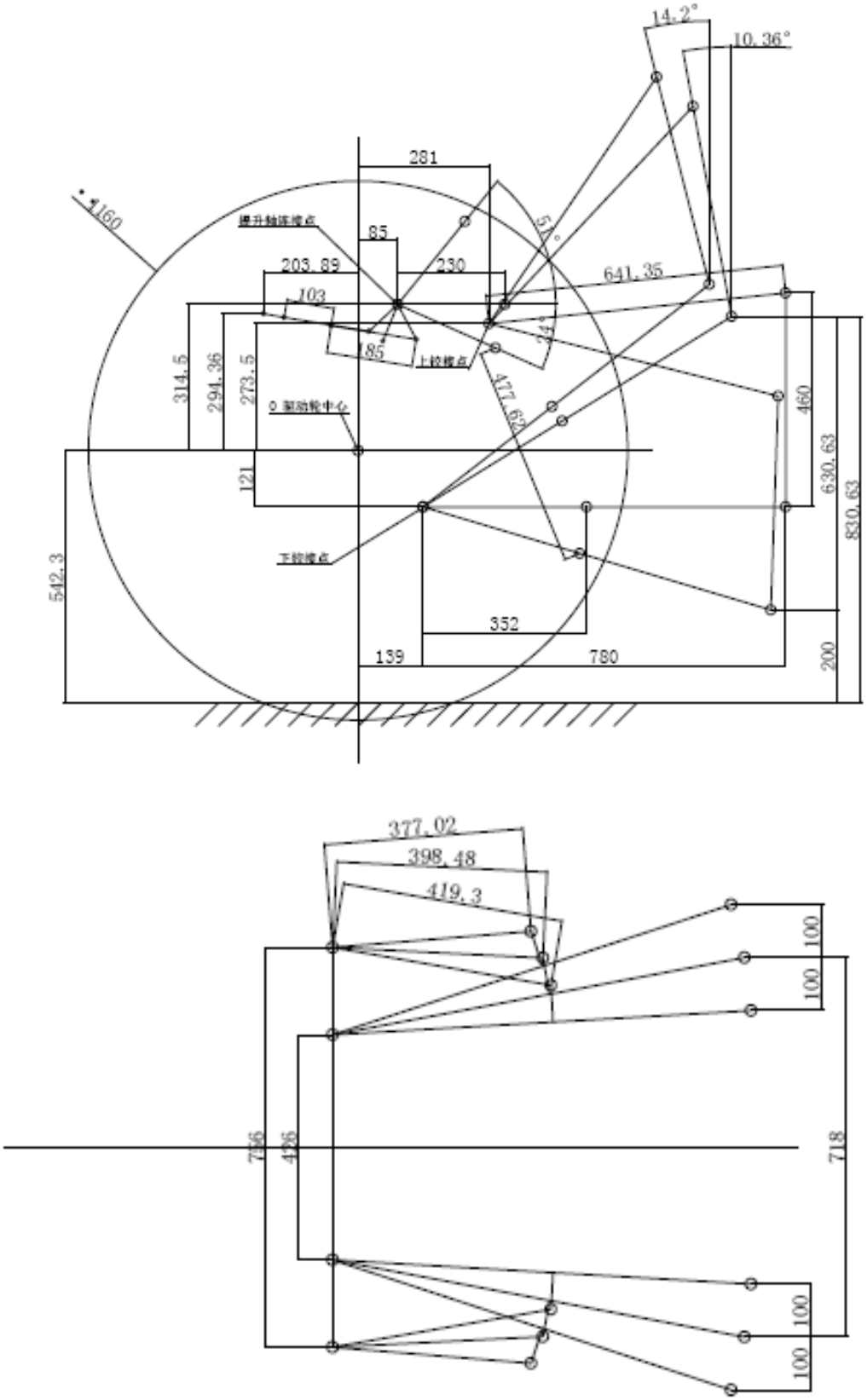

Fig. 3-18 Dimensional Drawing of Suspension System

3.15.7.1 Running-in of Power Take-off Shaft

The TE EC series tractor is equipped with a two-speed power take-off shaft with a rotating speed of 540/1000 (r/min). The operation steps of the power take-off shaft are as follows:

1. Ensure that the PTO clutch switch is turned off, i.e., in the "0" position, and can be controlled by the dashboard.
2. Turn the control handle of power take-off shaft to neutral position, remove the cover of power take-off shaft, then connect the connect the universal joint on the agricultural tool with the power take-off shaft.
3. Confirm that the PTO guard is installed;
4. Then turn the control handle to the gear position of the required speed.
5. Turn on the PTO clutch, the corresponding PTO clutch engagement indicator light (green) on the combination instrument is on, and the work machine starts to operate.
6. Set the lifter control handle to the "lifting" position to lift the farm implements;
7. Disconnect the work machine in the opposite order.

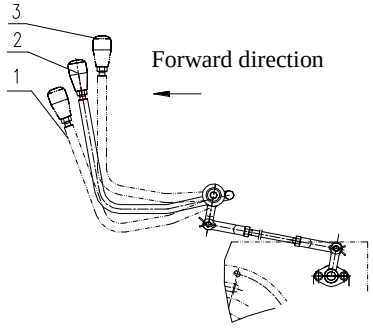

Operation of Power Take-off Device

1. High gear 2. Neutral gear 3. Low gear

Warning: When the power take-off is engaged, no one is allowed to approach the agricultural machinery, so as to avoid accidental injury!

3.15.8 Use of Electrical Equipment

3.15.8.1 Battery

The battery is used to store the electric energy generated by the generator. When the generator does not work or runs at low speed, the stored electric energy can be supplied to the electrical equipment of the tractor, and when the generator is overloaded for a short time, it can assist in power supply.

- The dust and sludge shall be removed from the battery case frequently to avoid electric leakage.

It shall be checked for cracks and electrolyte leakage, the pole and wire shall be kept in good contact, and the vent hole of the plastic cover shall be unblocked to avoid explosion;

- The battery voltage shall be checked frequently, and when it is too low, the battery shall be charged in time;
- Each starting time shall not exceed 5s (seconds) to avoid over discharge;
- If the tractor is not used for a long time, the battery shall be removed for charging and maintenance.

3.15.8.2 Generator

- The generator must be used together with the regulator;
- The negative pole "-" of silicon rectification generator is grounded. The positive and negative poles of the generator, regulator and battery can not be connected incorrectly, or the generator

and regulator will be burnt out;

- It is prohibited to check whether the generator generates electricity by grounding ignition;
- During shutdown, the ignition key shall be pulled out to cut off the connection between the motor and the battery, so that the battery will not discharge for a long time.

3.15.8.3 Starter

- The starter shall not work continuously for a long time, and each starting time shall not exceed 5s (seconds) to avoid damage to the starter;
- At the moment of starting, if a clear impact sound (withstand gear) of the starter pinion and flywheel ring gear is heard, the key shall be returned immediately, and then

the second start shall be performed;

- During starting, if the key is returned and the starter continues to run, it shall be shut down immediately and started after troubleshooting.

3.15.8.4 Rear Trailer Socket

The electrical system of TE series tractors is of 12V (volt) negative grounding two-wire system. See Fig. 3-19 for the composition and circuit of the electrical system.

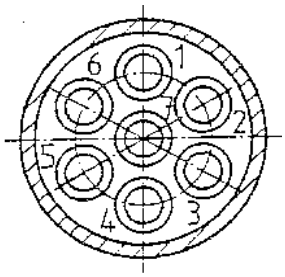

Fig. * Rear Trailer Socket

Rear trailer socket: in order to make it convenient to add trailer signal lights when tractors are equipped with trailers, this vehicle is equipped with rear trailer socket, and a bolt is equipped in the spare parts box. The connection position of socket is shown in the figure.

Contact 1: To left turn signal
Contact 2: Empty
Contact 3: Ground wire
Contact 4: To right turn signal
Contact 5: To rear right position lamp and rear license plate lamp
Contact 6: to brake lamp
Contact 7: To rear left position lamp and the rear license plate lamp

3.16.6 Use and Adjustment of Electrical System

The electrical system of this tractor adopts double-wire system, negative ground wire, system voltage 12V. The whole vehicle circuit is shown in Figures 3 - 5, 3 - 6 and 3 - 7.

3.16.6.1 Composition of Electrical Equipment

Tractor electrical equipment is mainly used to ensure the start of tractor, monitoring the working condition of diesel engine, and illumination and signal when tractor works.

The monitoring instrument and control switch of the tractor are arranged on the instrument panel in front of the driver.

Electrical equipment can be divided into the following parts according to its functions:

1. Power supply: consists of silicon rectifier integral generator and battery.
2. Starting part: consists of starting motor, preheating plug, etc.
3. Instrument device: consists of tachometer, coolant temperature meter, fuel gauge, hour meter and various indicator lights.
4. Lighting and signal devices: consist of headlamp, rear working lamp, front signal lamp, rear combined signal lamp, flasher, horn, etc.
5. Auxiliary electrical equipment: consists of central electrical box, rear trailer socket, ignition lock, rocker switch, brake light switch, etc.
6. Electric control part: It consists of starting control box, etc.

3.16.6.2 Use and Maintenance of Electrical Equipment

In order to ensure the normal operation of the tractor electrical system, the electrical system shall be used correctly and maintained regularly. Always check whether each electrical component works normally, whether the electrical connector is loose, and whether the insulation layer of the wire is damaged. If problems are found, they shall be eliminated in time. The following key components shall be regularly maintained during tractor operation:

- Battery: The battery is a maintenance-free lead-acid battery, with a low-temperature starting current of 620A and reserve capacity of 160 min.

The battery needs to be recharged under the following conditions:

- Engine is weak in starting or light is dim;
- Insufficient voltage: the battery voltage is lower than 10.5 V;
- When the battery is stored with liquid, it must be recharged once every three months.

Notes:

1. When charging, ensure that the air in the room is unblocked and away from open flames, and do not splash electrolyte on human body or clothes, so as to avoid accidental injury;

2. During charging, the electrolyte temperature shall not be higher than 45℃. If it reaches this temperature, in order to prevent accidental danger, the charging current shall be halved or stopped to cool, but the charging time shall be extended accordingly;

3. At the end of charging, disconnect the power supply before disconnecting the power supply from the pole, so as to prevent fire or explosion caused by friction fire.

- Starter motor

➢ The engine shall have a good starting performance. When the ambient temperature of the engine is not lower than -5℃, the starting time shall be less than 5 seconds; in any state, the engine starting time shall not exceed 15 seconds; when starting repeatedly, the interval shall not be less than 2 minutes. When it is difficult to start in winter, the diesel engine shall be preheated before turning on the starting motor. If the diesel engine fails to start for three consecutive times, stop starting and check the cause of the fault. Do not use the starter motor for a long time or for many consecutive times, so as not to damage the starter motor and battery.

➢ During starting, when the starting switch is released, if the starting motor solenoid switch can't be automatically turned off and the starting motor continues to run, the key shall be turned to the "OFF" position immediately, then the battery power supply system shall be cut off, causes shall be found out and startup shall be carried out after troubleshooting.

- Lighting and signal devices

Lighting and signal devices are mainly used to illuminate the surrounding environment or the supporting agricultural machinery when tractors work at night or during transportation. In case of faults, stop the machine for inspection in time. In case of any damage, replace the accessories of the same model as required, and do not replace other substitute products at will.

- Generator

Always remove the dust and oil pollution on the exterior of the generator, especially the dust and oil pollution on the terminals, and keep the wiring in good condition. Tension of V belt of the generator shall be appropriate. If it is too loose, the V belt pulley will slip, resulting in insufficient power generation. If it is too tight, the bearing wear will be accelerated. Generally, it is advisable to press with force of (29.4 ~ 49.0) N in the middle of V belt with a distance of (15±3) mm.

- Instrument

The tachometer and coolant temperature meter are mainly used to monitor the working condition of diesel engine. The fuel gauge is used to monitor the remaining condition of diesel oil level. The hour meter is used to record the working hours of the engine. The charging indicator lamp is used to monitor the working condition of the generator. The oil pressure indicator is used to monitor whether the engine lubrication system works normally. Therefore, the working condition of the instrument shall be observed frequently, and if there is any abnormality, the machine shall be stopped in time for inspection and troubleshooting.

- Auxiliary electrical equipment

➢ Fuse box: There are 12 gears for the fuse box in total. With spare fuse blades of each specification. Fuses are mainly used to protect electrical equipment, and their specifications shall meet the requirements of drawings. If there are too many blows, the causes of faults shall be checked and eliminated in time. It is strictly forbidden to arbitrarily change the specifications of each fuse, otherwise the electrical equipment will be damaged.

➢ Ignition lock: the ignition lock is used to connect the whole vehicle circuit (engine start, etc.). Insert the key into the ignition lock hole, turn it clockwise to ON position to close the whole vehicle circuit and start preheating. Turn clockwise to ST position to turn on ECU to control engine starting. After startup of the diesel engine, the key will automatically return to ON position after releasing. The key is always in the ON position when the tractor is working. When the tractor stops working for a long time, the key shall be removed to disconnect the electrical circuit of the whole vehicle.

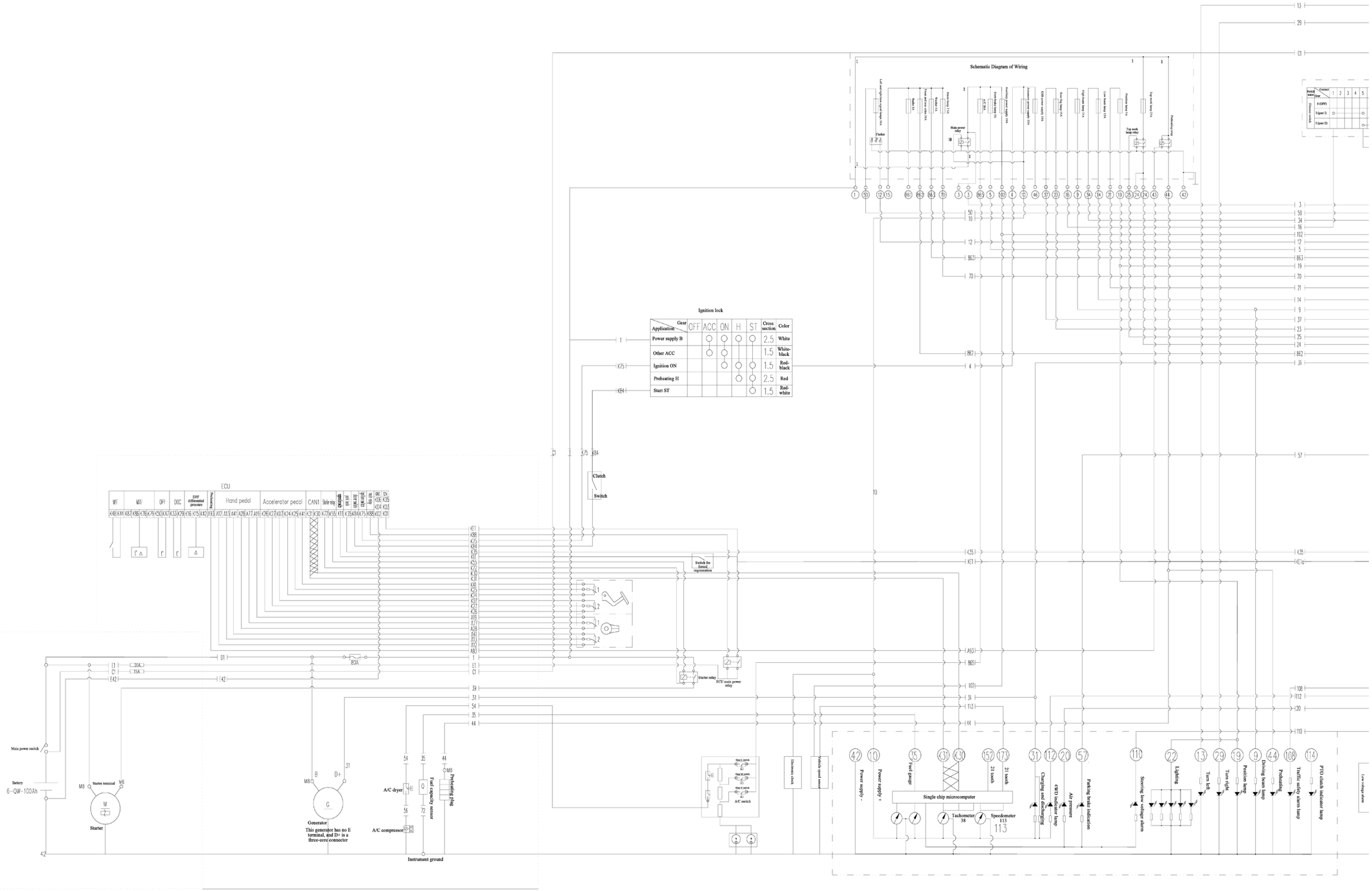
Schematic Diagram of Wiring
Ignition lock
Application
Gear
OFF
ACC
ON
H
ST
Cross section
Color
Power supply B
Other ACC
Ignition ON
Preheating H
Start ST
White
White-black
Red-black
Red
Red-white
Clutch
Switch
ECU
Hand pedal
Accelerator pedal
Switch for forced regeneration
Starter relay
ECU main power relay
Main power switch
Battery
6-QW-100Ah
Starter terminal
Starter
Generator
This generator has no E terminal, and D+ is a three-core connector
A/C dryer
A/C compressor
Fuel capacity sensor
Preheating plug
Instrument ground
Electronic clock
Vehicle speed sensor
A/C switch
Single chip microcomputer
Tachometer
Speedometer
Power supply +
Power supply -
Fuel gauge
21 tooth
Charging and discharging
4WD indicator lamp
Air pressure
Parking brake indication
Steering low voltage alarm
Lighting
Turn left
Turn right
Position lamp
Driving beam lamp
Preheating
Traffic safety alarm lamp
PTO clutch indicator lamp
Low voltage alarm

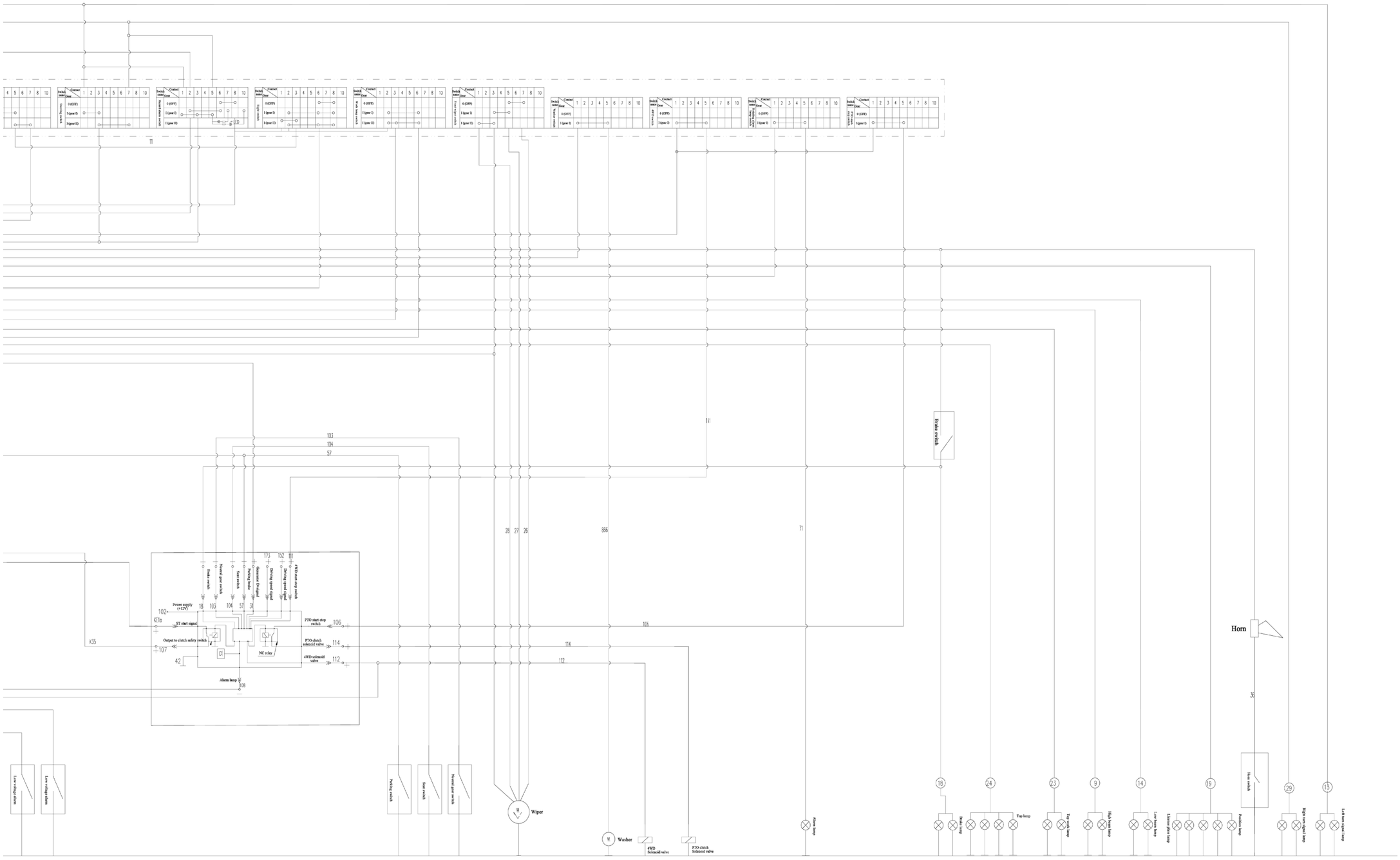
Power supply (+12V)
ST start signal
Output to clutch safety switch
Power switch
Neutral gear switch
Seat switch
Parking brake
Generator Drainpipe
Driving speed signal
4WD Gear stop switch
PTO start stop switch
PTO clutch solenoid valve
4WD solenoid valve
NC relay
Alarm lamp
Low voltage meter
Low voltage alarm
Parking switch
Seat switch
Neutral gear switch
Wiper
Washer
4WD Solenoid valve
PTO clutch Solenoid valve
Alarm lamp
Brake switch
Brake lamp
Top lamp
Top work lamp
High beam lamp
Low beam lamp
License plate lamp
Position lamp
Horn
Horn switch
Right turn signal lamp
Left turn signal lamp

3.16 Running-in of Tractor

Before putting into operation, the tractor shall operate for a period of time under the specified lubrication, speed and load conditions, and at the same time, necessary inspection, adjustment and maintenance shall be carried out to normalize the technical state, which is called running-in.

3.16.1Preparations Prior to Running-in

- During running-in, the technical maintenance per shift and 50h tractor technical maintenance shall be carried out for the tractor (see 4. maintenance instructions of this Manual).
- Check and tighten the external bolts, nuts and screws of the tractor.
- Add grease to oil cups of front hub, front drive axle king pin and water pump shaft. Check the oil levels of engine oil pan, drive system and lifter, central drive and final drive of front drive axle, and fill it as specified in case of insufficiency.
- Add enough fuel and coolant confirming to the grade.
- Check whether the tire pressure is normal.
- Check the electric circuit for proper and reliable connection.
- Keep each control handle in the neutral position.

3.16.2 Running-in of Engine Idling

The idle running-in of the engine shall be performed for 15 min. After starting the engine in the order specified in "Operation and Maintenance Manual of Diesel Engine", enable the engine to run for 5min respectively from low speed (small throttle) to medium speed (middle throttle) and finally to high speed (big throttle).

During idling running-in of the engine, carefully check the working conditions of the engine, air compressor and hydraulic oil pump, observe whether there is any abnormality and sound, and check for water leakage, oil leakage and air leakage. Check if the instrument is working properly. In case of any abnormality, it is necessary to stop the engine immediately and carry out running-in again after troubleshooting.

Carry out the following running-in only when ensuring the engine works properly.

3.16.3 Running-in of Power Take-off Shaft

Put the engine throttle control handle in the middle throttle position to enable the engine to run at medium speed. Make the power take-off shaft run at low speed and high speed for 5min respectively, and check for abnormality. After running-in, the power take-off shaft must be in the neutral position.

3.16.4 Running-in of Hydraulic System

Start the engine, put the throttle in the middle throttle position, operate the distributor handle, and lift and

lower the suspension mechanism for several times to observe if there is any abnormality. Then, hang a heavy object with a mass of about 300kg or a matching farm implement with equivalent mass on the suspension mechanism, enable the engine to run in the big throttle position, operate the distributor handle, and lift and lower the suspension mechanism in the whole stroke for no less than 20 times. Check whether the hydraulic suspension mechanism can be fixed at the highest position or required position, and check the lifting time and leakage.

When the tractor is stationary, the engine runs at low, medium and high speed. Operate the steering wheel smoothly to the left and right for 10 times each. Observe the follow-up situation of left and right steering of the tractor front wheel, normal sound, and convenient and smooth operation of steering wheel.

If any fault is found during running-in, the causes shall be analyzed and eliminated in time.

3.16.5 Empty-loaded and Load Running-in of Tractor

After idling running-in of the engine, and running-in of the power take-off shaft and hydraulic system, and when it is confirmed that the technical state of the tractor is completely normal, the running-in of the whole machine can be performed in according to Table 3-2. During idling running-in, turning operation shall be performed at low speed and an unilateral brake shall be used properly, and the emergency brake test shall be carried out at high speed.

After idling running-in, load running-in can only be carried out when the technical state of the tractor is completely normal, and the load must be from small to large and the gears from low to high, one by one. During running-in, attention must be paid to:

- Observe whether the readings of electrical equipment and various instruments are normal.
- Whether the engine runs normally.
- Whether the clutch is engaged smoothly and disengaged completely.
- Whether the gear shift of the gearbox is convenient and flexible, and whether there is any incorrect gear engagement or automatic out of gear.
- Whether the brake works reliably.
- Whether the differential lock is reliably engaged and disengaged.
- Whether the front drive axle is reliably engaged and separated.
- In case of any fault, running-in can be continued after troubleshooting.

3.16.6 Technical Maintenance after Running-in

After running-in of the tractor, there will be some metal chips or dirt mixed in lubricating oil in the drive system, lubrication system and hydraulic system. Therefore, all lubricating oil and hydraulic system oil must be cleaned and replaced, and they can be put into normal use before necessary technical maintenance.

The technical maintenance after running-in is as follows:

- After shutdown, drain the oil from the engine oil pan while it is hot, and clean the oil pan, oil filter

screen, diesel filter, oil filter and air filter. After replacing the diesel filter and oil filter element, inject new lubricating oil according to the technical requirements.

- Drain the oil from the drive system and front drive axle while it is hot, and add the appropriate amount of light diesel oil or kerosene. If the engine doesn't start, drag the tractor forward or backward at a slow speed for about 3 min or lift the front and rear tires of the tractor off the ground, and rotate the front and rear tires in 2 directions for about 3 min, and immediately discharge the cleaning solution. At the same time, remove the oil suction filter of the lifter for cleaning, and after reinstallation, add new oil to the drive system lifter and front drive axle as required.
- Carry out technical maintenance on diesel engine according to the "Operation and Maintenance Manual of Diesel Engine";
- Drain the cooling water, clean the engine cooling system with clean water, and then add new coolant.
- Check the toe-in of the front wheel and the free stroke of the clutch and brake, and adjust it if necessary;
- Check and tighten all external bolts, nuts and screws;
- Add grease to each part of tractor according to maintenance manual;

Important:

1. The newly delivered or overhauled tractor must be put into normal use after running-in, otherwise the service life of the tractor will be shortened.

2. Drivers must learn and be familiar with the operation and use methods of the tractor before running in the tractor.

Table 3-2 Running Time at Each Stage (8F+8R Chassis) Unit: h

Tractor gear	Forward gear								Reverse gear							
	Low 1	Low 2	Low 3	Low 4	High 1	High 2	High 3	High 4	Reverse 1	Reverse 2	Reverse 3	Reverse 4	Reverse 5	Reverse 6	Reverse 7	Reverse 8
Empty-loaded	0.5	0.5	0.5	0.5	0.5	0.5	0.5	0.5	0.5	0.5	0.5	0.5	0.5	0.5	0.5	0.5
1.2t heavy load with trailer for road transportation.				4	4.5	5	5	2.5								
Operation with plow in sandy land with a tillage depth of 14 cm.		5	5	5	5	4										

3.17 Common Faults and Troubleshooting Methods of Tractor

3.17.1 Faults and Troubleshooting Methods of Chassis

3.17.1.1 Faults and Troubleshooting Methods of Clutch

Table 3-3 Faults and Troubleshooting Methods of Clutch

Fault symptom	Failure cause	Troubleshooting methods
1. Clutch slipping	(1) There is oil stain on the friction plate and pressure plate; (2) The friction plate is excessively worn or burnt out; (3) The spring pressure decreases; (4) The pedal free stroke is too short, or there is no free stroke; (5) The clutch driven plate is severely deformed.	(1) Clean with gasoline, find out the cause and troubleshoot. (2) Replacement of friction plate (3) Replace the spring (4) Readjust the pedal free stroke as required. (5) Replace the clutch driven plate
2. The clutch is not completely disengaged, and the gear engagement is noisy.	(1) The pedal free stroke is too long and the working stroke is too short. (2) The clutch driven plate is excessively warped. (3) Heads of 3 release levers not in the same plane	(1) Adjust the pedal free stroke as required. (2) Change the driven plate (3) Adjust as required.
3. Trailer jitters at start	(1) Heads of 3 release levers not in the same plane (2) Oil-stained friction plate and driven disc (3) The driven plate is seriously warped. (4) The fixing screws of flywheel and clutch housing are loose.	(1) Adjust as required. (2) Clean the friction plate and driven plate. (3) Change the driven plate (4) Stop immediately for inspection and troubleshooting.

3.17.1.2 Faults and Troubleshooting Methods of Transmission

Table 3-4 Faults and Troubleshooting Methods of Transmission

Fault symptom	Failure cause	Troubleshooting methods
1. Difficulty in gear engagement or gear engagement failure	(1) The clutch is not disengaged completely. (2) The gear shift interlocking lever is too long. (3) The gear shift lever fork head is seriously worn. (4) The engagement sleeve end face and the gear end face are worn or damaged.	(1) Troubleshoot according to clutch troubleshooting methods (2) Appropriately shorten the gear shift interlocking lever. (3) Replace the gear shift lever. (4) Replacement or repair
2. Spontaneous out-of-gear	(1) The gear shift interlocking lever is too short. (2) The shift fork shaft locating groove is seriously worn. (3) The interlocking pin spring pressure is insufficient. (4) The bearing on the gear shaft is worn to tilt the shaft. (5) The gear seat spline is worn.	(1) Lengthen the gear shift interlocking lever appropriately. (2) Replace the shift fork shaft (3) Adjust or replace the interlocking pin spring. (4) Replace the bearing (5) Replace the gear base
3. Incorrect gear engagement	(1) The gear shift lever fork head is worn. (2) The shift guide plate groove is seriously worn. (3) The shift groove of shift fork and engagement sleeve is worn. (4) The interlocking pin and the shift fork shaft locating groove are worn.	(1) Repair or replace the shift lever (2) Replace the shift guide plate. (3) Replace the shift fork and engagement sleeve. (4) Replace the interlocking pin and shift fork shaft.
4. Noise or knocking sound in gearbox	(1) The gear is excessively worn and the tooth surface is peeled off. (2) Serious wear or damage to bearings (3) The lubricating oil is insufficient or the oil quality is not in conform to the regulations.	(1) Replace the gear (2) Replace the bearing (3) Add or replace lubricating oil

3.17.1.3 Rear axle and brake faults and troubleshooting methods

Table 3-5 Faults and Troubleshooting Methods of Rear Axle and Brake

Fault symptom	Failure cause	Troubleshooting methods
1. Increased noise of the central drive	(1) The bearing clearance of small bevel gear is too large. (2) Abnormal gear engagement (3) The supplementary bearing of bevel gear or the gear is damaged. (4) Wear and seizure of differential shaft (5) Wear in planetary gear or gasket (6) Wear or damage of differential bearing	(1) Adjust as required. (2) Readjustment as required (3) Replace bearing or gear (4) Replace the differential bearing (5) Replace the planetary gear or gasket. (6) Replace the differential bearing
2. Overheating of driving spiral small bevel gear and differential bearing	(1) The pre-tightening force is too large. (2) Lubrication is poor. (3) The backlash of bevel gear pair is too small.	(1) Readjust the pre-tightening force (2) Check the lubricating oil level, and supplement it in case of insufficiency. (3) Adjust the gear backslash
3. Abnormal final drive sound	(1) The bearing, gear or shaft is damaged.	(1) Replace the bearing, gear or shaft.
4. Brake failure	(1) Free stroke of brake pedal too large (2) Serious wear or eccentric wear of friction plate (3) Free stroke of pedal too large	(1) Readjust the pedal free stroke. (2) Replacement of friction plate (3) Adjust the pedal free stroke as required.
5. Brake heating	(1) The brake friction plate does not return. (2) The friction plate is not completely separated from the brake hub	(1) Replace the return spring (2) Adjust as required.
6. Deviation of tractor during braking	(1) The free travels of the left and right brake pedals are inconsistent. (2) Damaged brake lining on one side (3) Inconsistent pressure of two rear tires	(1) Adjustment (2) Replacement of friction plate (3) Check and inflate the tires as required.

3.17.1.4 Travel system faults and troubleshooting methods

Table 3-6 Faults and Troubleshooting Methods of Travel System

S/N	Fault symptom	Failure cause	Troubleshooting methods
1.	Severe wear in front tires	(1) The front wheel rim or spoke plate is severely deformed. (2) Improper adjustment of toe-in (3) The two pin shafts of knuckle and oil cylinder are seriously worn. (4) The tire pressure during transportation is insufficient . (5) The front drive axle is not disengaged during transportation. (6) Reverse installation of front driving tire pattern	(1) Correct the front wheel rim or spoke plate. (2) Adjust the toe-in (3) Replace the pin shafts. (4) Inflate the tire as required. (5) Disengage the front drive axle. (6) Reinstall the tire as required.
2	Swing of front wheels	(1) The fastening nuts and bolts of ball pin, oil cylinder, steering swing arm are loose. (2) Improper adjustment of toe-in (3) The bearing clearance is too large or the bearing is seriously worn. (4) Severe deformation of the front wheel rim	（1） Check and fasten them (2) Adjust the toe-in (3) Adjust or replace the bearing (4) Correct the front wheel rim.
3	Loud noise	(1) Poor meshing mark of central drive gear (2) Too large clearance of central drive bearing or damaged central drive bearing (3) Wear or damage of differential bearing (4) Wear in planetary gear or gasket (5) The final engagement of planetary gear pair is poor.	(1) Readjust the engagement mark. (2) Adjustment or replacement (3) Replace the differential bearing (4) Replace the planetary gear or gasket. (5) Replace the planetary drive gear.
4	Heating of transmission shaft and sheath	(1) The drive shaft is severely bent and deformed, resulting in friction.	(1) Correct or replace drive shaft
5	Loud noise in transfer case	(1) The speed gear is too high (2) Severe wear of bearings or gears	(1) Shift to low gear (2) Replacement or repair

3.17.1.5 Hydraulic steering system faults and troubleshooting methods

Table 3-7 Faults and Troubleshooting Methods of Hydraulic Steering System

S/N	Fault symptom	Failure cause	Troubleshooting methods
1	Oil leakage	(1) The rubber rings at all pipe joints are damaged or the bolts are loose. (2) The rubber ring at the joint surface of the valve body, stator and back cover of hydraulic steering gear is damaged. (3) The rubber ring at the journal is damaged. (4) The bolts at the joint of steering gear are loose.	(1) Replace the rubber ring or tighten the bolts. (2) Clean and replace the rubber ring. (3) Replace the rubber ring. (4)Tighten the bolt
2	Hard steering	(1) The oil supply of the gear oil pump is insufficient, and the gear oil pump leaks, and the steering wheel is light when turning slowly and heavy when turning quickly. (2) When the steering wheel is turned, the oil cylinder sometimes moves and sometimes does not. (3) The spring force of the safety valve becomes weak, or the steel ball is not sealed, the light load steering is light, and the increased load steering is heavy (4) Too high oil viscosity (5) The one-way valve of steel ball in the valve body fails, the fast and slow steering wheels are heavy, and the steering is not strong	(1) Check whether the gear oil pump is normal and clean the filter screen (2) Exhaust air from the system and check whether the oil suction pipeline for air inlet (3) Clean the safety valve and adjust the pressure spring of the safety valve (4) Use the specified oil (5) Repair or replace the parts
3	Steering failure	(1) Pin fracture or deformation (2) Fracture or deformation of linkage shaft opening (3) Wrong installation of rotor and linkage shaft (4) Steering cylinder piston or piston seal ring damaged	(1) Replace the pin (2) Replace the linkage shaft (3) Reassembling (4) Replace the piston or seal ring
4.	Unmanned steering	(1) Excessive clearance between rotor and stator (2) The oil cylinder piston reaches the extreme position during power steering, but the driver's terminal feeling is not obvious; when the steering force is turned, the steering wheel rotates and the oil cylinder does not move	(1) Replace the rotor and stator (2) Replace the piston seal ring

5.	Insensitive steering	(1) The clearance between the valve core and the valve sleeve is too large. (2) The clearance between the linkage shaft and the pin is too large. (3) The clearance between the linkage shaft and the rotor is too large. (4) The return spring is broken or too soft.	(1) Replacement (2) Replacement (3) Replacement (4) Replacement

3.17.1.6 Hydraulic suspension system faults and troubleshooting methods

Table 3-8 Faults and Troubleshooting Methods of Hydraulic Suspension System

S/N	Fault symptom	Failure cause	Troubleshooting methods
1	Unable to lift regardless of light or heavy load	(1) The oil filter screen is seriously blocked. (2) The air enters the oil suction pipe. (3) The gear oil pump fails. (4) The elastic pin at the outer or inner end of the control handle shaft falls off. (5) The swing link in the distributor falls off. (6) The main control valve is stuck in the neutral or down position, or the oil return valve is stuck in the ON position. (7) The pin is shortened, or the lowering valve assembly is loosened and screwed out, so that the lowering valve cannot be opened.	(1) Clean or replace the oil filter screen (2) Check the pipeline connection (3) Check, repair or replace the gear oil pump. (4) Reinstall the elastic pin. (5) Open the distributor and install the swing link. (6) Disassemble the distributor and clean the valves. (7) Remove the blockages of the lowering valve, readjust the clearance of the lowering valve push pin or tighten the lowering valve assembly.
2	Light load lifting, unable to lift or slow lifting under heavy load.	(1) The air is sucked in or enters the oil suction line. (2) The adjusting pressure of the system safety valve is too low. (3) The adjusting pressure of the cylinder safety valve is too low. (4) The gear oil pump is seriously worn and the pressure is insufficient. (5) The oil cylinder sealing ring leaks.	(1) Check the oil suction line and oil filter. (2) Adjust or replace the system safety valve. (3) Adjust or replace the cylinder safety valve. (4) Repair or replace the gear oil pump (5) Replace the cylinder seal ring

S/N	Fault symptom	Failure cause	Troubleshooting methods
3	Farm implement jittering during lifting, and slow lifting	(1) Oil filter clogging (2) The air enters the oil suction pipe. (3) The gear oil pump fails. (4) Hydraulic oil level excessive low	(1) Clean or replace the filter element (2) Eliminate the air leakage at the joint and O-ring. (3) Replacement of gear oil pump (4) Add the lubricating oil as required.
4	Frequent "nodding" after farm implement lifting, and fast static settlement after engine shutdown	(1) The distributor one-way valve is not tightly sealed. (2) The lowering valve is not tightly sealed. (3) The cylinder safety valve leaks or is improperly adjusted. (4) The cylinder piston O-ring is damaged and leaks. (5) The sealing ring between the distributor or cylinder head and the oil inlet hole of lifter housing is poorly installed, falls off or is damaged.	(1) Clean the one-way valve, and face up it if necessary. (2) Clean or face up the lowering valve. (3) Repair or readjust the cylinder safety valve. (4) Replace the O-ring (5) Replace the sealing ring
5	Sharp sound from the distributor when the handle is in the lifting position.	(1) The adjustment is incorrect, the inner lifting arm is used to lift the lifter housing to open the safety valve.	(1) Firstly, measure the lifting height of farm implements at this time, and then readjust and shorten the force and position adjusting rod so that the highest lifting position is lower than the original position.
6	No hydraulic output or weak output of cylinder head	(1) The oil inlet line of oil cylinder is not cut off. (2) The front cone of lowering speed control valve and the taper hole are not tightly sealed.	(1) Tighten the lowering speed control handwheel clockwise. (2) Face up and repair the front cone of lowering speed control valve and taper hole, or replace the lowering speed control valve.

3.17.2 Faults and Troubleshooting Methods of Electrical System

3.17.2.1 Faults and Troubleshooting Methods of Engine

Table 3-10 Faults and Troubleshooting Methods of Engine

S/N	Faults	Fault cause	Troubleshooting
1.	Starter does not run	1) The battery capacity is insufficient. 2) The cable joint is loose and the ground vire is rusted. 3) The control circuit, e.g., of the starting witch, is open. 4) The connection between carbon brush nd commutator is poor. 5) There is open circuit or short circuit in he starting motor	1) Charge the battery as required. 2) Fasten the joint and remove rust. 3) Check the circuit to ensure the reliability f connection 4) Adjust the pressure of the carbon brush pring and clean the commutator. 5) Repair the starting motor.
2	The starter motor starts weakly, and the engine cannot be started	1) The battery capacity is insufficient. 2) The wire has poor contact. 3) The surface of the commutator is burnt r greasy 4) The carbon brush is excessively worn or he pressure of the carbon brush spring is nsufficient Poor contact between carbon brush and commutator 5) The main contact of the solenoid switch s burnt, causing poor connection 6)The bearing is serious worn and the rmature rubs on the motor casing.	1) Charge the battery. 2) Tighten the connector of the wire. 3) Grind the surface of the commutator or emove the grease 4) Replacement or adjustment 5) Grind the main contact with “0”type on-metallic sandpaper 6) Replace the bearing
3	The engine has started, but the starter continues to rotate, making a sharp noise.	(1) Circuit switch copper contacts on the starter are bonded to both contacts (2) The starter lever is unhooked or the eccentric screw is loose. (3) The lever return spring is broken or loses elasticity. (4) The armature shaft of the starter motor is broken or bent (5) The starter motor gets stuck due to tooth surface galling (6) Binding of starter relay contacts (7) The ignition switch does not automatically return after starting.	(1) Check the circuit and trim the contacts. (2) Readjust and fix. (3) Replace the spring (4) Replace the starting motor. (5) Trim the tooth surface. (6) Replace the starter relay (7) Replace the ignition switch

3.17.2.2 Faults and Troubleshooting Methods of Generator

Tab. 3-11 Faults and Troubleshooting Methods of Generator

S/N	Faults	Fault cause	Troubleshooting
1	Power generation failure of generator	1) The connecting wire is improper or roken. The connection is poor. 2) There is an open circuit in the rotor coil. 3) The rectifier diode is damaged 4) The carbon brush has poor contact 5) The regulator is damaged	1) Check and repair the circuit. 2) Check and repair the generator assembly 3) Replace the diode 4) Remove the dirt or replace the carbon rush. 5) Repair or replace the regulator
2	Insufficient charging of generator	1) The drive v-belt is loose. 2)The connection of carbon brush is poor nd the slip ring is greasy. 3) Regulator damage 4) There is insufficient electrolyte in the storage battery or the plates are severely sulfated or too old	1) Adjust the tension of the drive V-belt 2) Adjust the carbon brush and clean the slip ing. 3) Replace the regulator 4) Supplement electrolyte until it reaches specified level. If the plates are too sulfated and the capacity of the storage battery cannot be recovered, the storage battery shall be replaced.
3	Charge current too high can easily burn the bulb.	Excessive high regulating voltage of regulator	Replace the voltage regulator

3.17.2.3 Battery Faults and Troubleshooting Methods

Table 3-12 Faults and Troubleshooting Methods of Battery

Fault symptom	Failure cause	Troubleshooting methods
1. Insufficient battery capacity and difficulty in engine starting	(1) The electrolyte level is extremely low (2) There is a short circuit between the plates. (3) The plates are sulfated (4) The connector in the circuit has poor contact, and there is too much oxide on the terminal or the battery is undercharged.	(1) Replace the battery (2) Remove the precipitate and replace the electrolyte. (3) Charge and discharge several times to remove the sulfate (4) Firmly connect it, remove the oxide, and apply a layer of vaseline on the pole head.

2. Excessive self-discharge	(1) There are impurities in the electrolyte. (2) There is a short circuit in the external wires of the battery. (3) There is electrolyte on the surface of the battery, causing a short circuit between the positive and negative poles (4) There are metal tools or rod pieces between the positive and negative terminals, causing a severe short circuit. (5) The active material on the plate comes off and deposits, causing a short circuit between the plates; there is a short circuit between the plates due to a damaged separator; the plates are deformed, causing a short circuit between the plates	(1) Replace the battery (2) Check the shorted part and eliminate the fault. (3) Use alkaline water or warm water to wash the battery surface and terminal so as to keep the surface clean (prevent the water from entering the battery) (4) Remove the metal tools or rod pieces on the surface of the battery.

3.17.2.4 Faults and Troubleshooting Methods of Instrument

Table 3-13 Faults and Troubleshooting Methods of Instrument

S/N	Fault symptom	Failure cause	Troubleshooting methods
1	The water temperature gauge pointer always points to low temperature.	(1) The circuit is open, and the connector is in poor contact. (2) Water temperature sensor damaged (3) The water temperature gauge fails.	(1) Repair the circuit and remove the dirt at the connector. (2) Replace the coolant temperature sensor (3) Replace the instrument
2	The water temperature gauge pointer always points to high temperature.	(1) Short circuit damage of water temperature sensor (2) There is a short circuit. (3) The water temperature gauge fails.	(1) Replace the coolant temperature sensor. (2) Repair it and eliminate the short-circuit fault. (3) Replace the instrument
3	The indication of oil pressure gauge is abnormal.	(1) There are open circuit and short circuit. (2) There are open circuit, short circuit and poor contact in the sensor. (3) The oil pressure gauge fails.	(1) Check and eliminate the fault. (2) Repair or replace the sensor. (3) Replace the instrument

3.17.2.5 Faults and Troubleshooting Methods of Lighting

Table 3-14 Faults and Troubleshooting Methods of Lighting

S/N	Fault symptom	Failure cause	Troubleshooting methods
1	Headlamp without high-and-low beam	(1) The circuit is open; and the short-circuit fuse is blown. (2) The dimmer switch is in poor contact and damaged. (3) Filament is burnt	(1) Repair and close the circuit. (2) Overhaul and replacement (3) Replace with the bulb of good quality.
2	The rear lamp is not on.	(1) Open circuit (2) The rear lamp switch is in poor contact and damaged.	(1) Repair and close the circuit. (2) Overhaul or replacement

4 Accessories, Spare Parts and Vulnerable Parts

4.1 Accessories and Spare Parts

4.1.1 Details of Accompanying Tools

Table 4-1 Details of Accompanying Tools

S/N	Code	Name	Qty.	Remarks
1	JB/T 7942.1	Lever-type grease gun A100	1	
2	QB/T 2564.4	Slot head screwdriver 1×5.5×125P	1	
3	TD800.96-08	Cross head screwdriver 6X150P	1	
4	GB/T 4388	Double open end spanner 10X13X135	1	
5	GB/T 4388	Double open end spanner 16X18X183	1	
6	GB/T 4388	Double open end spanner 21X24X223	1	
7	GB/T 4388	Double open end spanner 27×30×244	1	
8	GBT3390.4	Manual socket wrench connecting rod 204×20×200a	1	
9	GBT3390.1	Manual socket wrench socket 21×20ALa	1	
10	TG1254.96-05	Bending handle 254-20（200×50×φ20）	1	
11	TD800.96-05	Carton box	1	
12	TD800.96-04	Specification:	1	
13	FT650.51.200	Sealing strip of spare parts box	3	

4.1.2 Details of Accompanying Spare Parts

Table 4-2 Details of Accompanying Spare Parts

S/N	Code	Name	Qty.	Remarks
1	TC02482010003K	Warning fuse (10A)	1	
2	TC02482010005K	Warning fuse (20A)	1	
3	TC02482010006K	Warning fuse (30A)	1	
4	TD900.484.3	Rear trailer plug	1	
5	TB1S402010022K	Filter cartridge	1	
6	TB1S581010018K	Oil suction filter element	1	

4.1.3 List of Accompanying Documents

Table 4-3 Details of Accompanying Documents

S/N	Code	Name	Qty.	Remarks
1		Accompanying Technical Documents for Engine DOCUMENTS OF ENGINE	1	
2		Qualified Certificate QUALIFIED CERTIFICATE FOR TRACTOR	1	From supporting manufacturer of the engine
3		Parts Diagram of the Tractor PARTS CATALOGUE OF THE TRACTOR	1	
4		Qualified Certificate for Engine QUALIFIED CERTIFICATE FOR ENGINE	1	From supporting manufacturer of the engine
5		Operation Manual for Tractor OPERATION MANUAL FOR TRACTOR	1	

Note**:** Please accept the accompanying tools, spare parts and documents for engine according to the diesel engine packing list.

Important matters:

1、 All kinds of spare parts and tools listed above are special parts of the machine, please keep them properly to avoid lost, so as to prepare for the use, repair and maintenance of the machine; if lost, function of the machine may be affected and performance may decrease;

2、 During repair and maintenance, please use the standard accessories required by the manufacturer; if non-standard accessories are used, the function, service performance and service life of the machine may be affected, and even safety hazards may occur.

5. Maintenance Instructions

5.1 Technical Maintenance Procedures

Technical maintenance of tractors as early as possible can effectively prolong the service life of machines and reduce accidents.

According to the total working hours, the technical maintenance of TE series tractors includes: every shift (10h), every 50h, every 200h, every 400h, every 800h, every 1600h, special maintenance in winter and long-term storage.

Important matters:

1. All maintenance work must be carried out by personnel who are professionally trained and familiar with the characteristics of this machine to avoid damages to the tractor;

2.Technical maintenance procedures must be strictly implemented in order to make the tractor work normally and prolong its service life;

3. During the tractor warranty period, if the tractor is damaged by non-professional personnel who are unfamiliar with the characteristics of the machine, or failure to perform the corresponding maintenance work according to the regulations during the maintenance cycle specified by the manufacturer, the relevant Three Guarantees service rights of the tractor will be lost;

4. Self-assertive adjustment by users is strictly forbidden, including adjustment to engine, opening pressure of hydraulic system safety valve and air brake system safety valve, and opening pressure of water tank cover , otherwise damages will be caused to tractor, the service performance of the machine will be affected, and the relevant Three Guarantees service rights of this tractor will be lost.

5.1.1 Technical Maintenance Per Shift (Every 10h)

(1) Remove dust and oil pollution form the tractor. Clean the air filter when the tractor is working in windy and dusty environment.

(2) Check the main fastening bolts and nuts outside the tractor, especially whether the nuts of the front and rear wheels, for looseness, and tighten them if necessary.

(3) Check the liquid level of engine oil pan, water tank, oil tank, hydraulic lifter shell and battery, and add it in the case of insufficiency. Check the liquid level of the engine oil pan only after the engine stops working for 30 min.

(4) Add lubrication grease according to Maintenance 1.

(5) Check the tractor for air leakage, oil leakage, and water leakage, and eliminate the "three leaks" if any.

(6) Check the air pressure of front and rear tires, and inflate them as specified in the case of insufficiency.

(7) Check and adjust the free stroke of main clutch, and brake pedal.

(8) Maintain the diesel engine according to the requirements of "Daily Maintenance" in the *Operation Manual of Diesel Engine*.

(9) Check the hydraulic oil pipe for leakage. Once leakage occurs, it should be eliminated immediately.

5.1.2 Technical Maintenance Every 50h

(1) Complete all procedures of technical maintenance per shift.

(2) Check the oil level of oil-bath air filter and remove dust.

(3) Check the tightness of the fan belt (when the belt is pressed by hand, the sag is (15~20) mm), and adjust it if necessary.

(4) Apply lubrication grease to the electrode joints of the battery to prevent corrosion.

(5) Open the clutch oil drain plug to drain the accumulated oil.

(6) Maintain the diesel engine according to the requirements in "Level I Technical Maintenance" in the *Operation Manual of Diesel Engine*.

5.1.3 Technical Maintenance Every 200h

(1) Complete all procedures of technical maintenance every 50h.

(2) Replace the oil in the engine oil pan, clean the oil pan and oil suction pan, and clean the oil filter.

(3) Clean and maintain the oil sump of oil-bath air filter.

(4) Clean the lifter oil filter and replace the filter element if necessary.

(5) Maintain the diesel engine according to the requirements of "Level II Technical Maintenance" in the *Operation Manual of Diesel Engine*.

5.1.4 Technical Maintenance Every 400h

(1) Complete all procedures of technical maintenance every 200h.

(2) Check the oil level of transmission case and add it if necessary.

(3) Check the oil level of the front drive axle and add it if necessary.

(4) Check and adjust the tightness of front wheel toe-in and front wheel bearing, and adjust it if necessary. Replace the lubrication oil in the front hub.

(5) Check the idling angle of the steering wheel and adjust it if necessary.

(6) Clean and maintain the hydraulic system filter.

(7) Maintain the diesel engine according to the requirements of "Level III Technical Maintenance" in the *Operation Manual of Diesel Engine*.

5.1.5 Technical Maintenance Every 800h

(1) Complete all procedures of technical maintenance every 400h.

(2) Replace the hydraulic system oil.

(3) Thoroughly clean the water tank with 25% hydrochloric acid solution, and then rinse it with clean water.

(4) Clean the transmission case and replace the lubrication oil while the car is warm-up.

(5) Clean the oil suction strainer of the hydraulic system, check the cleanliness of the oil, and if necessary, clean the inner cavity of the lifter shell and replace with new oil.

(6) Check and adjust the engine valve clearance.

(7) Check and adjust the fuel injection pressure of the fuel injection pump.

(8) Clean the fuel tank and the filter in the fuel tank.

(9) Maintain the diesel engine according to the requirements of "Level Ⅳ technical maintenance" in the *Operation Manual of Diesel Engine*.

5.1.6 Technical Maintenance Every 1600h

(1) Complete all procedures of technical maintenance every 800h.

(2) Disassemble the engine and motor, clean the lubrication grease in the bearing and replace it with new one.

(3) Replace the lubrication oil of central and final transmission of front drive axle.

(4) Immerse the clutch front bearing and release bearing in melted high temperature resistant lubrication grease, and add lubricant grease.

(5) Check whether the clearance and contact mark of the central transmission gear are normal, check the clearance and pre-tightening of the bearing, and make adjustments if necessary.

(6) After maintenance, assemble the machine for short-term test run, and check and adjust the working conditions of each mechanism.

5.1.7 Special Technical Maintenance in Winter

When the temperature is lower than 5 ℃, except for the "technical maintenance per shift", the following regulations should also be strictly observed:

(1) For starting the engine easily, the cooling system can be filled with (60 ~ 80) ℃ hot water.

(2) After starting, the cold engine should be preheated for a period of time before operation.

(3) After operation of the tractor, if the parking time is long, the cooling water in the engine cooling system should be drained.

(4) Choose fuel and lubrication oil according to season or air temperature.

(5) To ensure the easy start of the tractor and engine, it is recommended to park the tractor in the hangar or hangar with heat preservation in cold season.

5.1.8 Maintenance of Tractor for Long-term Storage

If the tractor is stored for less than one month and the engine oil is replaced for less than 100h, no special protective measures are needed. If the tractor is stored for more than one month, special technical maintenance must be carried out. See "5 Storage" in this manual for details.

Table 5-1 Maintenance of TE Series Tractors

S/N	Maintenance parts	Operations	Points	Maintenance interval
1	Engine oil pan	Check the liquid level	1	Per shift
2	Oil-bath air filter	Check the liquid level	1	Per shift
3	Air pump	Check the liquid level	1	Per shift
4	Battery	Check the liquid level	1	Per shift
5	Radiator (water tank)	Check the liquid level	1	Per shift
6	Engine water pump shaft	Add grease	1	Per shift
7	Fuel injection pump	Check the liquid level	1	Per shift
8	Rear hub	Add grease	1	Per shift
9	Clutch	Adjust the free stroke	1	Per shift
10	Brake	Adjust the free stroke	2	Per shift
11	Fan belt	Check belt tension	1	Every 50h
12	Steering cylinder	Add grease	1	Every 50h
13	Four-wheel drive front axle swing shaft	Add grease	2	Every 50h
14	Front axle center swing pin bushing	Add grease	1	Every 50h
15	Front axle swing shaft	Add grease	1	Every 50h
16	Diesel filter	Replace the filter element	1	Every 200h
17	Oil filter	Replace filter	1	Every 200h
18	Lifter oil filter	Clean or replace the filter element	1	Every 200h
19	Fuel injection pump	Replace the lubrication oil	1	Every 200h
20	Engine oil pan	Replace the lubrication oil	1	Every 200h
21	Oil sump for oil-bath air filter	Maintenance and cleaning	1	Every 200h
22	Transmission case and lifter	Check the oil level	2	Every 200h
23	Front wheels	Add grease	2	Every 400h
24	Clutch pedal hub	Add grease	1	Every 400h
25	Brake pedal hub	Add grease	2	Every 400h
26	Front drive axle	Check the oil level	1	Every 400h
27	Front drive axle king pin oil cup	Add lubrication grease	2	Every 400h
28	Fuel tank	Cleaning and maintenance	1	Every 800h
29	Engine air intake and exhaust valve	Adjust valve clearance	4	Every 800h
30	Fuel injection pump	Adjust fuel injection pressure	2	Every 800h
31	Transmission case and lifter	Replace the lubrication oil	2	Every 800h
32	Engine cooling system	Cleaning and maintenance	1	Every 1600h
33	Engine cooling system with antifreeze	Replace antifreeze	1	Every 1600h
34	Front drive axle central transmission	Replace the lubrication oil	1	Every 1600h
35	Front drive axle end transmission	Replace the lubrication oil	1	Every 1600h
36	Hydraulic hose	Regular inspection	1	Every 1600h

5.2 Adjustment of Clutch

5.2 Adjustment of Clutch

To ensure the normal operation of the clutch, the clearance between the working face of the main clutch release lever 4 and the end face of the release bearing 5 must be kept at (2 ~ 2.5) mm. During the clutch is used, this clearance gradually decreases or even disappears due to the constant wear of clutch friction plates. Therefore, the adjustment and inspection must be carried out regularly.

(1) The clutch control mechanism is adjusted according to the following steps:

a. Adjust the extension length of the bolt (No.1) to make the pedal (160~170) mm high, and then lock the nut (No.2);

b. Adjust the thread connection length at both ends of the tie rod assembly (No.3) so that the free stroke of the pedal is (25~32) mm and the free stroke of the release bearing is (2~2.5) mm, and then lock the tie rod nut;

c. Adjust the screwing depth of the limit bolt (No.6) to make the total stroke of the clutch pedal (160~170) mm, and then lock the nut;

d. After the adjustment, the operation of each operating lever should be flexible without jamming, the main clutch and the auxiliary clutch should be completely separated, the gear shift should be flexible, and the pedal should return freely.

(2) Adjust the height of the clutch release lever (4) on the special assembly bench so that the three clutch release levers are in the same plane and in the size of 22, and the error of the three clutch pressure plate release levers, in the same plane, is not more than 0.2.

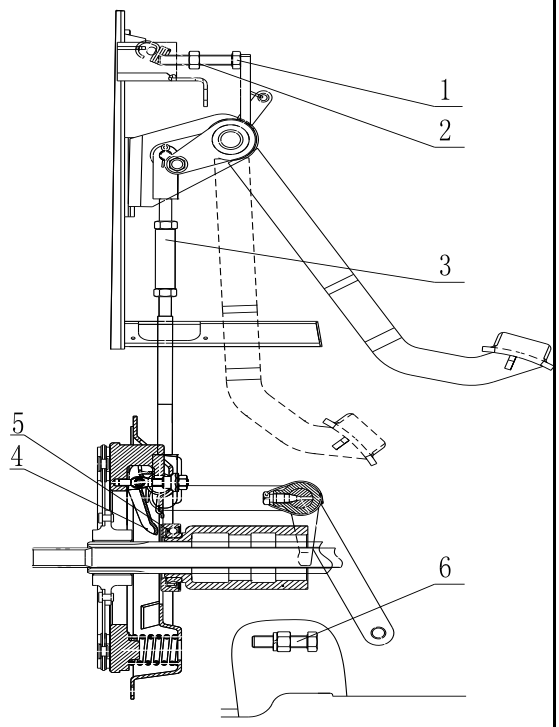

Fig. 5-1 Clutch

1. Adjusting bolt 2. Adjusting nut 3. Tie rod assembly 4. Main clutch release lever 5. Release bearing 6. Limit bolt

Important matters:

(1) To prevent friction plate from oil stain, frequently unscrew the blowhole plug under the flywheel housing and discharge the oil stain that may leak into the engine and transmission case. If serious leakage is found, the cause shall be found out in time and eliminated. Clean the friction plate with gasoline (or kerosene) if necessary.

(2) To prevent and avoid wear of friction plate, the clutch shall be maintained and adjusted frequently. Do not casually disengage and engage the clutch in use. When people are disengaging the clutch, the clutch pedal shall be stepped down to the bottom quickly. Never work in the semi-engaged state, so as not to damage the clutch.

(3) It is strictly prohibited to work when clutch is not adjusted well, which will accelerate the wear of the clutch friction plate and even burn it.

(4) When installing the clutch, the release bearing 5 (see Fig. 5-1) and the inner cavity of the release bearing seat shall be filled with lithium-based lubrication grease. Check the release bearing 5 for oil shortage when people are disassembling the clutch. In the case of oil shortage, put it into heated molybdenum disulfide lithium-based

lubrication grease to make the lubrication grease penetrate into the bearing, take out and install it after the lubrication grease is cooled. Do not wash the release bearing in gasoline or diesel, so as to prevent the lubrication grease in the bearing from being washed away. Otherwise, lubrication grease must be refilled.

5.3 Adjustment of Brake

5.3.1 The Brake Shall be Adjusted When One of the Following Conditions Occurs:

- The full stroke of the brake pedal is too large, and the brake fails;
- The full stroke of the brake pedal is too small, and the clearance between the friction plate and the partition plate is too small, so it is often in a semi-braking state;
- The left and right braking forces are inconsistent, and the tractor has "deviation".

5.3.2 Adjustment of Brake:

- Adjustment of free stroke of brake pedal:

  To adjust the adjusting bolt (No.1) so that the height from the center of the lower edge of the pedal surface to the floor is (123-130) mm. Adjust the length of the upper tie rod through the adjusting sleeve (No.2) so that the angle between the lower rocker arm and the vertical direction is about 15°. Adjust the length of the lower tie rod by adjusting the connecting rod (No.4) so that the angle between the brake rocker arm and the vertical direction is about 5°. Make the pedal within the full stroke (75-85) mm so that the brake can be reliably locked, and then lock each lock nuts.

- Adjustment of hand brake stroke:

  Adjust the length of nuts at both ends of the brake cables A and B and studs at the long fork (No.5) so that the handbrake stroke is (115-185) mm, the brake is locked, and the parking on the slope is reliable.

- Adjustment of brake "deviation":

  When the adjustment of the left and right brakes is inconsistent, and the tractor brakes suddenly at high speed, the left and right tire impressions are inconsistent in length, namely "deviation". At this time, the brake lever on the side with short impression should be shortened appropriately, or the brake lever on the side with long impression should be lengthened appropriately until the left and right tire impressions are basically the same in length and can be reliably braked, and then each nut should be locked.

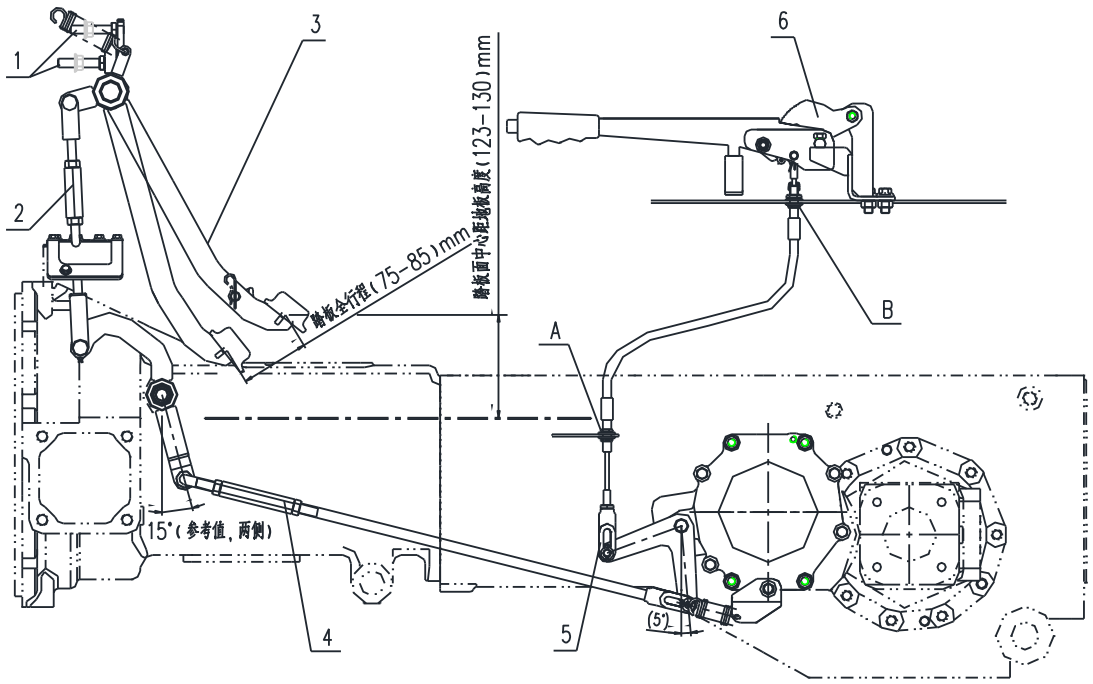

Fig. 5-3 Brake System

1. Adjusting bolt 2. Adjusting sleeve 3. Brake pedal 4. Connecting rod 5. Long fork 6. Handbrake handle

Note: The tractor's left and right brake pedal strokes must be adjusted to the same, otherwise the tractor will deflect sharply to one side during emergency braking, which will cause accidents.

5.4 Adjustment of Central Transmission

5.4.1 Adjustment of Pre-tightening of Cone Bearing

After a period of use, the original preload will gradually disappear due to bearing wear, and there will be clearance between two bearings. When the clearance is more than 0.1 mm, the cone bearing should be pre-tightened again.

Adjustment of the pre-tightening of the second shaft cone bearing: Adjust the tightening degree of the lock nut 1 close to the cone bearing 4 so that the torque for rotating the second shaft 5 alone is (0.7 ~ 1.1) N·m. After adjustment, lock the tab washer 2 and tighten the lock nut 1.

Adjustment of pre-tightening of differential cone bearing

Add (or reduce) the same amount of adjusting washers 13 between the two sides of the transmission case and the bearing seats of the cone bearing, tighten the bolts of the two bearing seats and rotate the second shaft. If the rotating torque is larger than that when the differential is not installed (0.4 ~ 0.7) N·m, its pre-tightening is appropriate. At this time, push the bevel gear axially, and there should be no movement.

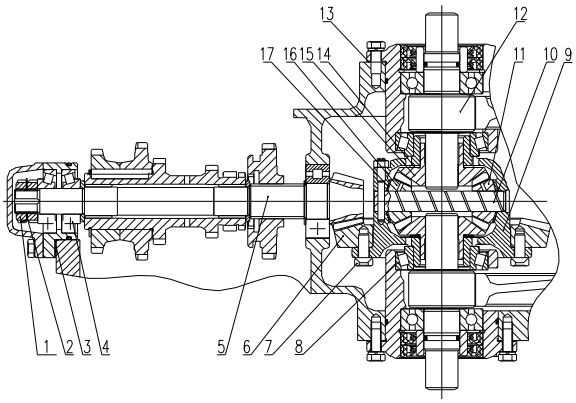

L1. Lock nut 2. Tab washer 3. Two-axis adjusting washer 4. Cone bearing 5. Second shaft 6. Driven bevel gear 7. Bolt 8. Cone bearing 9. Differential housing 10. Planetary gear shaft 11. Planetary gear 12. Final transmission driving gear 13. Adjusting washer 14. Side gear washer 15. Side gear 16. Planetary gear 17. Planetary gear washer

Fig. 5-4 Adjustment of Pre-tightening of Cone Bearing

5.4.2 Adjustment of Contact Mark and Backlash of Bevel Gear Pair

When impact or noise is generated due to excessive wear or abnormal contact mark in tooth surface during the use of the spiral bevel gear pair, or when a new bevel gear pair is replaced, the contact mark and backlash should be readjusted and checked regularly.

(1) Inspection of backlash

There are two ways to check the backlash: one is dial indicator measurement. When people are measuring, place the contact of the dial indicator on the tooth surface of the big end of the big bevel gear, fix the small bevel gear, and swing the big bevel gear according to the rotation direction. At this time, if the reading of the dial indicator is (0.14~0.3) mm, the backlash is correct. Another method is to put a lead piece, with length of (15~20) mm and thickness of 0.5 mm, or a fuse with "∽" shape between the non-gearing face of the gear pair, and turn the gear pair, and then the measured thickness of the lead piece or fuse after being squeezed at the big end is the normal backlash there. This value should be (0.1~0.25) mm. For accuracy, three points should be measured on the same circumference of the gear to take the average value.

(2) Inspection of tooth surface contact mark

Contact mark of tooth surface is checked by staining. Before inspection, the big and small bevel gears should be cleaned and dried, and a layer of even red lead oil should be coated on the tooth surfaces on both sides of the big spiral bevel gear, and the gear pair should be rotated in the positive and negative directions, and then the mark stuck on the tooth surface of the small bevel gear is contact mark. The ideal contact mark should be distributed near the small end in the middle of the working tooth. The mark is allowed to be spotted, but the length is not less than 60% of the tooth length and the height is not less than 50% of the tooth height.

See Table 5-2 for the adjustment methods of backlash and tooth surface contact mark.

During adjustment, the axial movement of large and small bevel gears will change the backlash and contact mark. If the requirements for contact mark and backlash are contradictory, the contact mark should be ensured to be correct. In the case the adjustment range of backlash can be appropriately enlarged, especially when gears and bearings are worn, but the backlash should not be less than 0.1 mm.

In the normal use of tractor, as long as the contact mark is normal and only the backlash increases, no adjustment is needed. However, when the tractor is overhauled or a pair of central transmission gears or bearings is replaced, careful adjustment must be made to ensure the backlash and contact mark.

Important matters: The large and small central transmission bevel gears are paired gears, thus wrong assembly should be precluded.

They should be replaced in pairs, preferably together with the bearing, otherwise their service life will be affected.

Table 5-2 Adjustment of mark of small spiral central transmission bevel gears

S/N	Mark description	Mark of small spiral bevel gear in forward gear	Mark of small spiral bevel gear in reverse gear	Adjustment description and illustration	
1	Normal mark	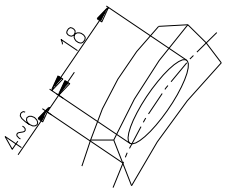	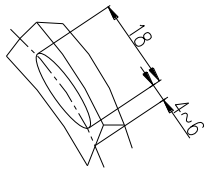	In forward gear, the total length of the mark on the concave surface of the small spiral bevel gear is not less than 60% of the tooth width and the height is not less than 50% of the tooth height, and it is distributed near the small end in the middle of the tooth height; When in reverse gear, the mark on the convex surface of the small spiral bevel gear is the same as above.	
2	Abnormal mark	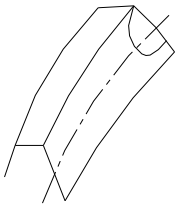	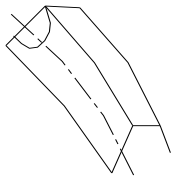	(1) Add the adjusting washer at the front bearing sleeve of the second shaft to make the small spiral bevel gear move forward; (2) If the clearance is large, move the big bevel gear to the right.	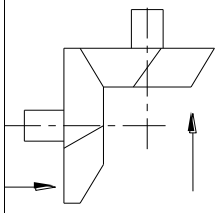
	Abnormal mark	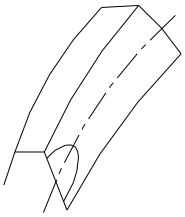	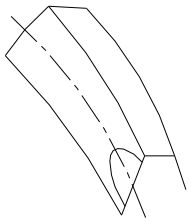	(1) Reduce the adjusting washer at the front bearing sleeve of the second shaft to make the small spiral bevel gear move backward; (2) If the clearance is small, move the big bevel gear to the left.	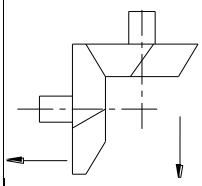

S/N	Mark description	Mark of small spiral bevel gear in forward gear	Mark of small spiral bevel gear in reverse gear	Adjustment description and illustration	
		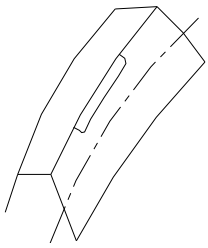	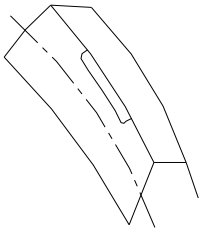	(1) Reduce the adjusting washer at the front bearing sleeve of the second shaft to make the small spiral bevel gear move backward; (2) Reduce the adjusting washer at the left bearing sleeve and add it to the right side accordingly, so that the big bevel gear moves to the right.	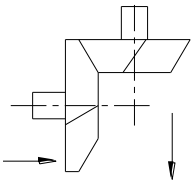
		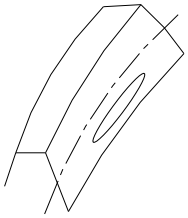	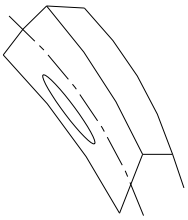	(1) Add the adjusting washer at the front bearing sleeve of the second shaft to make the small spiral bevel gear move forward; (2) Reduce the adjusting washer at the right bearing sleeve and add it to the left side accordingly, so that the large bevel gear moves to the left.	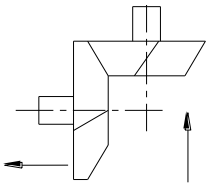
Note: The straight arrow indicates the moving direction of the gear.					

5.6 Adjustment of Steering System

5.6.1 Precautions for Use of Full Hydraulic Steering System (Hydraulic Check)

Lovol four-wheel drive tractor adopts full hydraulic steering, as shown in the figure. The steering system is correctly adjusted before the tractor leaves the factory. Attention shall be paid to the following matters during use:

- Check each thread joints frequently, and tighten them in time if necessary. When the full hydraulic steering system works, there shall be no oil leakage at each joint.
- During use, if heavy steering or failure is found, the cause shall be carefully found out at first. Do not pull the steering wheel hard, and do not disassemble the steering gear easily to prevent parts from being damaged. It is forbidden for two people to turn the steering wheel at the same time.
- The steering gear shall be coaxial with the steering shaft and shall have clearance in the axial direction when people are installing the full hydraulic steering system. Check the steering wheel for flexible return after installation.
- The oil must be clean. For this purpose, check the condition of filter element and oil frequently. Method: Drop the oil on blotting paper. If the center of the oil spot is black, the oil needs to be replaced.
- After that, exhaust the gas in the cylinder. Method: Loosen the bolt of the steering cylinder, and let the oil pump run at a low speed for venting until there is no foam in the oil flowing out. Remove the connection between the piston rod of the steering cylinder and the steering wheel, turn the steering wheel to make the piston reach the leftmost or rightmost position (do not stop at the two extreme positions), and then fill the oil tank to the specified maximum oil level.

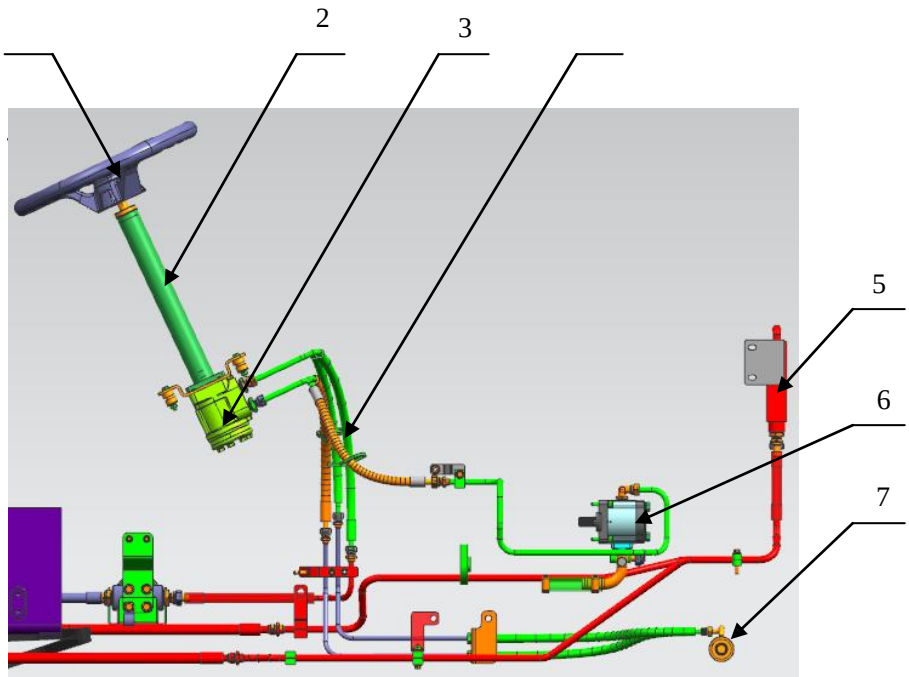

Fig. 5-6 Full Hydraulic Steering System

1. Steering wheel assembly 2. Steering column assembly 3. Hydraulic steering gear assembly
4. Steering oil pipe assembly 5. Radiator assembly 6. Constant flow pump assembly
7. Steering cylinder assembly

5.6.2 Adjustment of Front Wheel Toe-in

During the use of tractor, the front wheel toe-in changes due to the deformation and wear of steering mechanism and front axle parts. Failure to adjust in time will accelerate the wear of the front tire. Adjustment of front wheel toe-in is as follows:

- Park the tractor on the flat ground, and put the front wheels in a straight driving line;
- Measuring the distances A and B between the front and rear ends of two front wheels at the same horizontal height passing through the center of the front wheels;
- Loosen the lock nuts 3 at both ends of the left tie rod 1 and the right tie rod 4, and turn the ball-head bolt. When B - A = 0 - 4 mm, lock the left tie rod 1 and the right tie rod 4 with the lock nuts 3. Note: The left and right sides should be adjusted simultaneously.

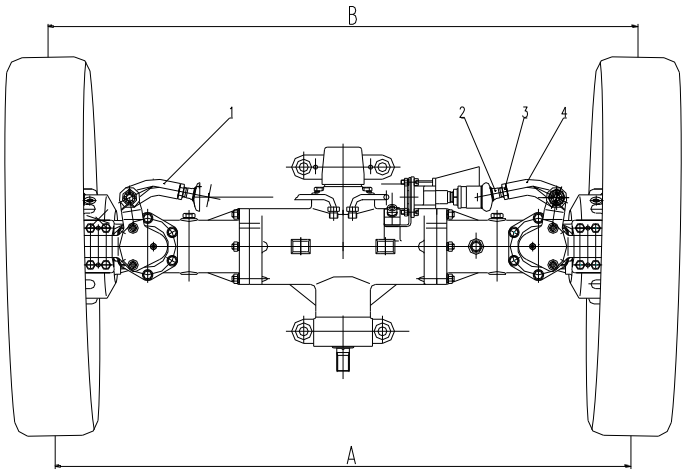

Fig. 5-7 Adjustment of Front Wheel Toe-in

1. Left tie rod 2. Ball-head bolt 3. Lock nut 4. Right tie rod

5.6.3 Adjustment of Rear Wheel Tread

- The adjustment of the rear wheel is stepless adjustment by changing the fixed position of the rear wheel hub on the drive shaft. At the same time, it can be stepped adjustment by turning over the rim of the drive wheel and exchanging the left and right drive wheels:

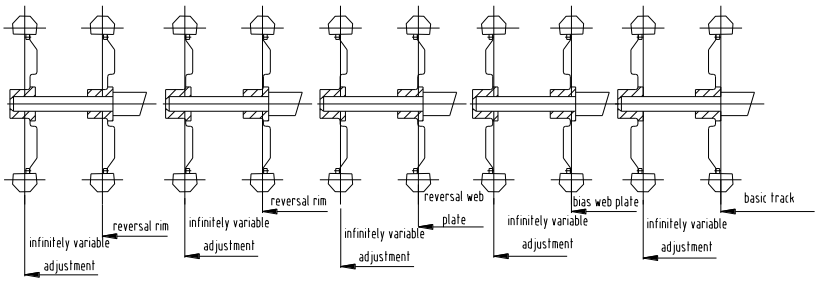

Fig. 5-8 Adjustment of Rear Wheel Tread

5.7 Adjustment of Front Drive Axle

5.7.1 Adjustment of Central Transmission of Front Drive Axle

- The two tapered roller bearings on the small bevel gear shaft of the front drive axle and the left and right tapered roller bearings on the differential housing are pre-tightened. During use, the small bevel gear shaft and the differential housing occur axial clearance due to the wear of the bearings, so they should be checked regularly every 1600h. The adjustment of small bevel gear shaft bearing depends on adjusting the thickness of adjusting washer 5 so that the torque for rotating small bevel gear shaft independently is (1.0 ~ 2.0) N·m. And then tighten nut 6.

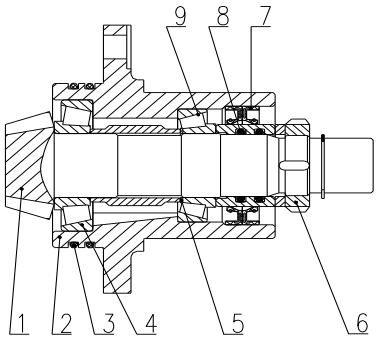

Fig. 5-9 Adjustment of Central Transmission of Front Drive Axle
1. Driving bevel gear shaft 2. Bearing seat of driving bevel gear shaft 3. O-ring 4. Bearing
5. Adjusting washer 6. Nut 7. Oil seal 8. O-ring 9. Bearing

- To adjust the bearing of differential housing, select the appropriate adjusting washer 1, tighten the adjusting bolt 2, lock the lock washer 3, and rotate the small bevel gear shaft. If the rotating torque is (0.27 ~ 0.53) N·m more than that when the differential is not installed, the pre-tightening is appropriate. At this time, push the bevel gear axially, and there should be no movement.
- The testing method of backlash and gearing marks is the same as that of the rear axle central transmission.

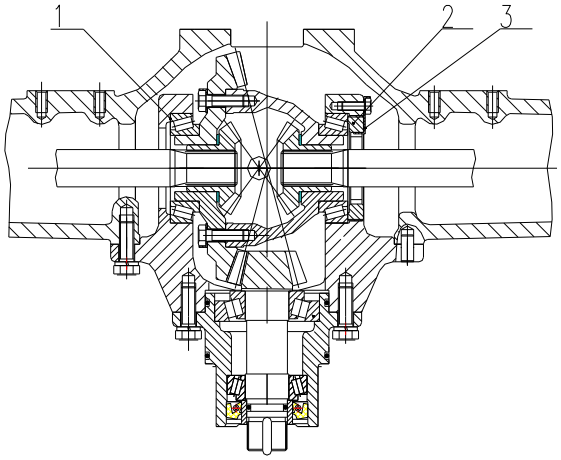

Fig. 5-10 Adjustment of Differential Housing Bearing

5.7.2 Adjustment of Side Transmission of Front Drive Axle

The adjustment of backlash and gearing marks between driving gear and driven gear of Level I central transmission of front drive axle side drive depends on adjusting the adjusting washer 1.
And the adjustment of backlash and gearing marks between driving gear and driven gear of Level II end transmission depends on adjusting the adjusting washer 5.

The two backlash are both required to be (0.15 ~ 0.25) mm.

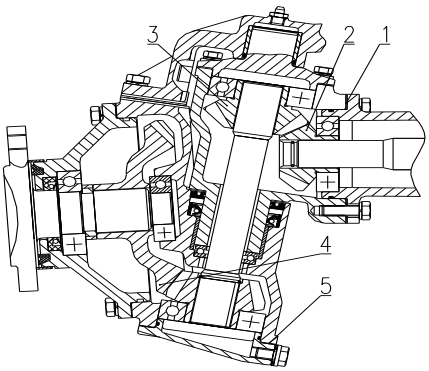

Fig. 5-11 Adjustment of Side Transmission of Front Drive Axle
1. Adjusting washer 2. Central transmission driving gear 3. Central transmission driven gear 4. End deceleration driven gear 5. Adjusting washer

5.8 Use and Maintenance of Air Filter

5.8.1 Instructions of Filter

- When the filter blockage alarm indicates a warning signal or the filter works for (50~100)h, the main filter element needs to be maintained;
- In the case of dusty working environment, the main filter element should be maintained every 8h or per shift;
- When the dust on the filter element cannot be cleaned after maintenance or the filter element is damaged, the filter element shall be replaced.

5.8.2 Maintenance Method of Filter

- Take out the filter element, clean the inner shell of the air filter with a brush, and discharge the dust in the rubber dust bag;
- While rotating the filter element, blow out the dust from the inside of the filter element with compressed air lower than 500 Kpa;
- Reassemble the filter element.

Important: The correct use and maintenance of the air filter is directly related to the service life of the engine, so it must always be kept clean. When the tractor is working in farmland, check, clean and change oil after each shift. When tractors are used in combination with harvesters, it is better to raise the position of the filter. It is forbidden to wash the filter element of dry air filter with oil and water during maintenance.

5.9 Adjustment of Fan Belt Tension

Press down the middle part of the fan belt with thumb, the applied force is (29.4 ~ 49.0)N, and the pressing distance is (15±3) mm. If this requirement is not met, it shall be adjusted as follows:

Loosen the fixing nut on the generator adjusting bracket, pull the generator outward to tighten the belt, and then tighten the fixing nut on the generator adjusting bracket.

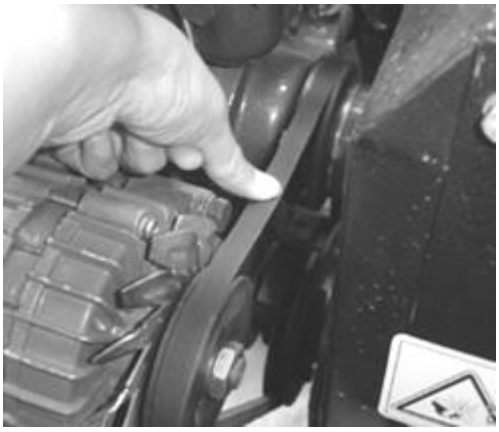

Fig. 5-13 Adjustment of Fan Belt Tension

5.10 Inspection of Oil Quantity in Engine Oil Pan and Change of Oil

(1) Pull out the oil dipstick A at the front left of the oil pan and check whether the oil level is between the upper and lower scribed lines. If the oil level is lower than the lower scribed line, add oil to the specified oil level.

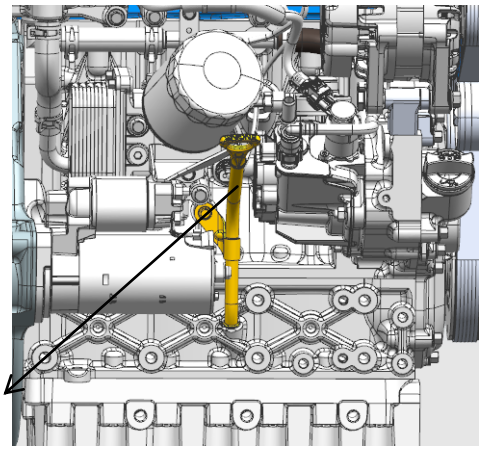

Fig. 5-14 Inspection of Oil Quantity in Engine Oil Pan

(2) Preheat the engine before maintenance and oil change. After the oil temperature reaches 50℃ ~ 60℃, unscrew the oil drain plug A under the oil pan, drain the dirty oil and clean the pan, and then refill it with new oil.

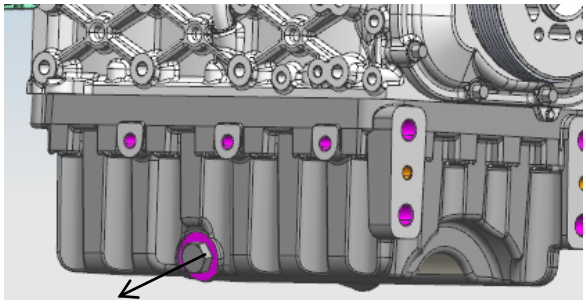

Fig. 5-15 Oil Change of Engine Oil Pan

Important: It is forbidden to mix old and new oils and mix different brands of oils to avoid damaging the engine. Replace the oil strictly according to the time specified in the *Operation Manual of Diesel Engine*.

5.11 Maintenance of Fuel Filter

The fuel filter is located below the right side of the engine. The paper filter element of the filter is not allowed to be cleaned. Replace the filter element shall be replaced every 200h of engine operation. The detailed maintenance shall be carried out according to the manufacturer's instructions.

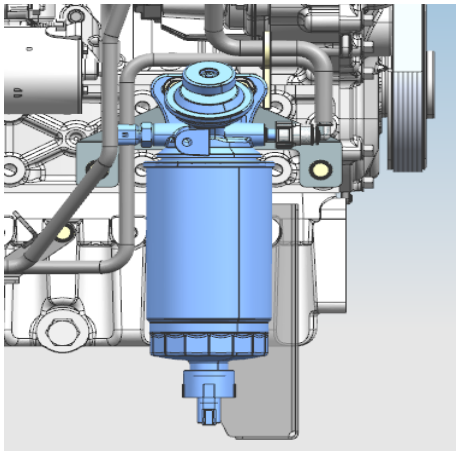

Fig. 5-16 Maintenance of Fuel Filter

5.12 Maintenance of Oil Filter

The oil filter is located in the middle on the right side of the engine, and the engine should be replaced every 200h of operation according to the technical requirements. The oil filter shall be replaced as a whole, and it must be tightened during installation. The detailed maintenance shall be carried out according to the manufacturer's instructions.

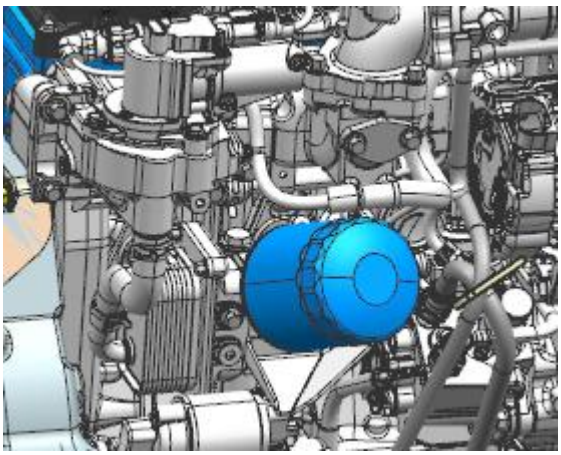

Fig. 5-17 Maintenance of Oil Filter

5.13 Inspection of Front Drive Oil Level

When people are checking the oil level of the front drive housing, unscrew the oil dipstick fitting "A". The oil level should be within the scale range of the oil dipstick, otherwise, add oil. When people are replacing the oil, unscrew the oil drain plug of central transmission and the left and right end transmissions. Drain all the dirty oil, then tighten the plugs, and add new oil from "A". After a period of rest, oil leaks out from "B", indicating that it is full.

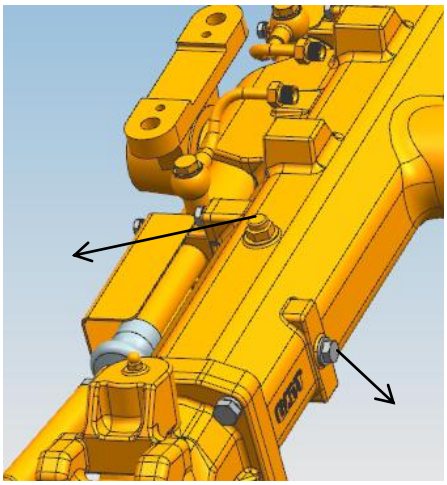

Fig. 5-18 Inspection of front drive oil level

5.14 Maintenance of Transmission System

Pull out the oil dipstick 3 located on the right side of the main gear shift lever (as shown in Fig. 4-21), wipe it clean, and then insert the dipstick. If the oil level is lower than the lower scribed line of the dipstick, add oil to make the oil level between the upper and lower scribed lines (it should be measured 5 min after refueling). Remove the oil drain plug at the bottom of the transmission case when people are replacing lubrication oil. Drain the dirty oil, then tighten the oil drain plug and add new oil.

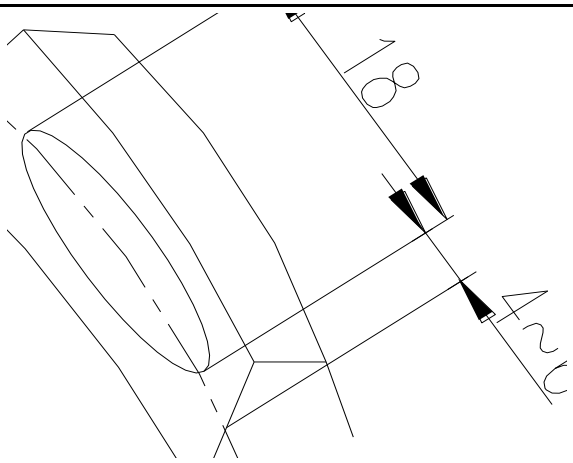

Fig. 5-19 Maintenance of Transmission System

1. Oil filler; 2. Oil filler cap

3. Oil dipstick; 4. Oil dipstick holder

Note: Before checking the oil level, park the tractor on the horizontal ground, turn off the engine.

5.15 Maintenance of Fuel Tank

Park the tractor on horizontal ground, turn off the engine, remove the oil drain plug under the fuel tank, and drain the sediment at the bottom of the fuel tank.

5.16 Inspection of Tire Inflation Pressure

Check the tire pressure with a barometer. See the technical specification list of TE series tractors for tire inflation pressure.

Note: Too high or too low tire pressure will shorten the service life of tires and affect the driving control of tractors and cause accidents.

5.17 Maintenance of Engine Cooling System

The engine coolant can be boiled tap water or antifreeze. The antifreeze is valid for 2 years or 1600h. After this period, replace and flush the cooling system, and then add new antifreeze. Cleaning of scale in cooling system: Before maintenance, fill the cooling system with a solution of 750g caustic soda and 150g kerosene per 10L of water. Run the engine at medium speed for (5 ~ 10) min, and keep the solution for (10 ~ 12) h (note: keep the temperature in winter to prevent freezing). Then restart the engine and run at medium speed for 20 minutes, and then stop the engine and drain the cleaning solution. After the engine cools down, insert the water pipe into the water tank for flushing. At this time, open the drain valve at the bottom of the water tank. After cleaning, close the drain valve, add water and let the engine run for 20min before draining the water. After the engine cools down, add new antifreeze or cooling water as required.

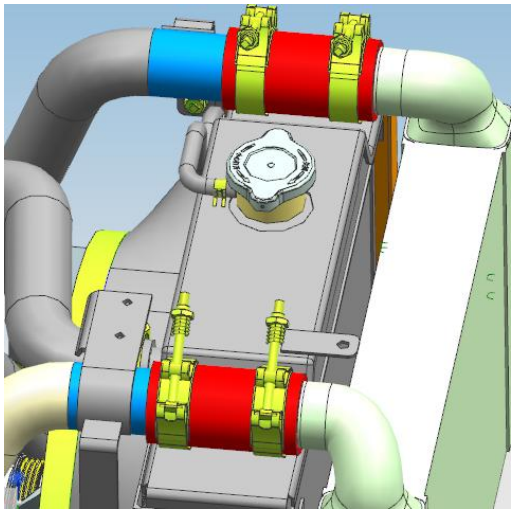

Fig. 5-20 Maintenance of Cooling System

Important: In winter, for tractors without using antifreeze, wait until the temperature of cooling water drops below 70℃, and drain the water when the engine is idling to avoid freezing and cracking the engine body.

5.18 Exhaust of Fuel System

If the tractor is out of service for a long time or the diesel filter element is being replaced,

and when the fuel tank is empty, air may enter the fuel pipeline. The air in the fuel system will make it difficult to start the engine. When the fuel tank is full and the oil circuit switch is in the ON position, exhaust the air according to the following steps:

- Press exhaust valve A repeatedly until it can't be pressed any more.

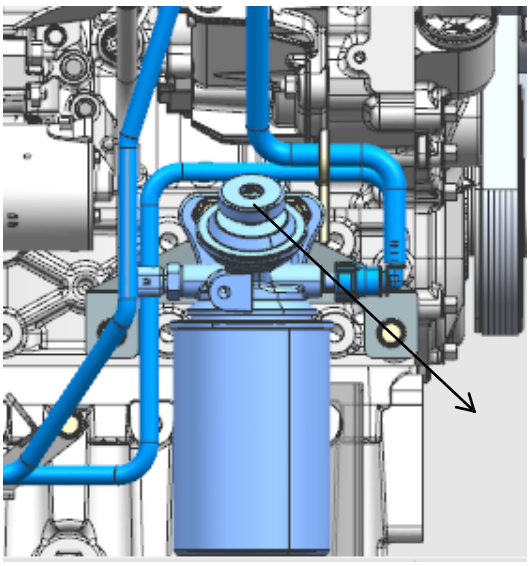

Fig. 5-21 Exhaust of Fuel System

Important: High-quality light diesel oil that meets the specifications must be used for engine. Generally, 0# light diesel oil shall be used in summer and -10# light diesel oil in winter. Diesel oil must be pure, and it must be precipitated and purified for at least 48h before use, otherwise it will affect the engine service life.

5.19 Add the Mark Position of Lubrication Points and the Description of Safety Filling Process

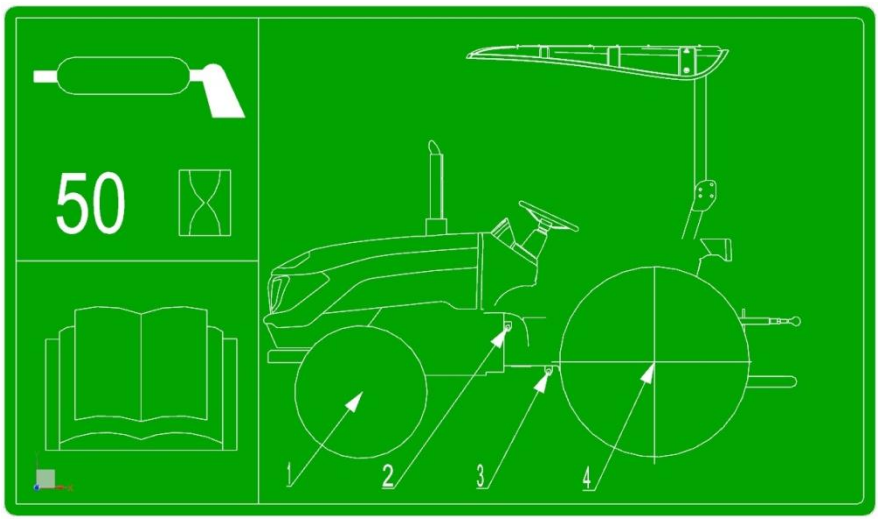

5.20 Battery

5.20 Maintenance of Maintenance-free Battery

- Inspection of battery condition

Maintenance-free battery does not need special maintenance ordinarily. Observe the hydrometer observation hole: green: sufficient power; black: insufficient power; white: basically no power (Fig. 5-1).

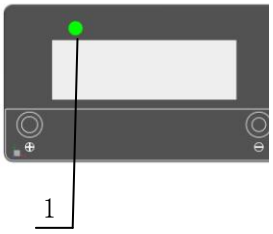

1. Hydrometer observation hole

- Charge the battery when the observation hole is black; Replace the battery when the observation hole is white.
- Maintenance of battery
  - Battery shall be stored in a clean, dry and ventilated warehouse at a temperature of (0 ~ 40)℃. Move carefully to prevent collision and never be in invert;
  - Battery terminals and power connectors shall be firmly connected to prevent melting and corrosion during starting. And wiring terminals shall be coated with vaseline;
  - Keep the external terminals of the battery clean;
  - Regularly check whether the output voltage of the generator meets the standard, and the voltage is (14.2 ±0.25) V.

6 Storage

Tractors must be properly kept and sealed after completing farmland operations, or when they are parked for a long time (more than one month) for some reasons. Tractors shall be kept in a good environment to prevent rusting, aging and deformation of the parts.

Before the tractor is sealed, it must be thoroughly cleaned and adjusted and all connectors must be fastened, and the specified technical maintenance must be completed in accordance with working time, so that the tractor can be kept in good technical condition.

Important: It is quite important to keep the tractor scientifically and maintain it specially during its long-term idle time. Otherwise, the tractor's technical condition will deteriorate faster than the working period.

6.1 Causes of Damage to the Tractor during Storage

6.1.1 Rust and Pollution: During parking, dust and moisture in the air can easily infiltrate into the internal of the tractor from gaps, orifices and other positions, causing pollution and rusting of parts; compare to the surfaces of moving parts (such as piston, valve, bearing, gear, etc.), they lose the lubricating oil film protection of flowing and pressurized because they are still in a certain position for a long time, resulting in corrosion, rust spots, cement blockage or sticking, and finally turn to scrap.

6.1.2 Aging: Rubber, plastic and other parts, under the sunlight, will age, deteriorate, become brittle, lose their effect or corrode and rot due to the effect of ultraviolet radiation.

6.1.3 Deformation: The drive belt, tires and other parts are stressed for a long time, resulting in plastic deformation.

6.1.4 Others: Damp of electrical parts, self-discharge of the battery, etc.

6.2 Storage of the Tractor

6.2.1 Before storage, carefully check the tractor, eliminate the existing faults and keep it in good condition. Clean the appearance of the tractor.

6.2.2 Drain the antifreeze and anti-rust fluid in the radiator, cylinder block and water pump, lubricating oil in the drive system and hydraulic oil in the hydraulic system.

6.2.3 Remove the battery, coat the pole with grease, and store it in a room which is lightproof, ventilated and at a temperature over 10℃ (Celsius).

6.2.4 Drain the engine oil in the engine while it is hot, fill it with new engine oil, and let the small throttle of the engine run for several minutes to make the oil evenly attached to the surface of each moving part.

6.2.5 Inject grease into each lubricating point

6.2.6 Apply electrical contacts, joints and surfaces of unpainted metal parts with dehydrated vaseline [heated to (100~200) °C (Celsius)].

6.2.7 Loosen the engine fan belt, take it off if necessary, wrap it up and store it separately, and spray rust inhibitor inside the pulley groove. The parts where the tractor surface is depainted shall be repainted.

6.2.8 Drain the diesel in the diesel tank and clean it.

6.2.9 Use protective materials (such as canvas, waterproof cloth or oil paper) to seal the open pipe orifices of the engine, such as the inlet and outlet, to prevent foreign objects, dust and moisture from entering.

6.2.10 Place all the control handles in neutral position (including electrical system switch), put the front wheels of the tractor in right position, and put the suspension rod piece in the lowest position.

6.2.11 Support the tractor with a wooden frame to release the load on tires. And regularly check the tire pressure.

6.2.12 The tractor shall be parked in the warehouse or carport with a ventilated and dry environment. It is strictly prohibited to store with corrosive objects and gases. If the conditions are not met, when parking in the open area, the dry platform with a higher terrain must be selected and covered with rain-proof cloth.

6.2.13 Parts and on-board tools removed from the tractors shall be cleaned, wrapped and stored in a dry warehouse.

6.3 Maintenance of the Tractor during Storage

6.3.1 Tractors must meet the above requirements of tractor storage during storage.

6.3.2 Check the tractor and its parts for rusting, corrosion, aging, deformation and other abnormal phenomena every month, and eliminate any problems found in time.

6.3.3 Every 2 months, rotate the engine crankshaft (10 ~ 15 turns) to prevent internal rusting. Remove the old grease and replace it with a new one at the lubrication part to be filled with grease.

6.3.4 Every 3 months, the tractor should be started and driven at a low speed (20 ~ 30 min), and all parts should be checked for any abnormal phenomena.

6.3.5 Wipe the dust on the top surface of the battery regularly with a dry cloth, and check the liquid level and density of the battery electrolyte regularly according to the requirements of the Battery Instructions. The battery discharges itself even if it is not used, thus the battery shall be recharged once a month.

Important: If the user does not have the conditions for anti-rust treatment and the tractor needs to be idle for several months or longer, engine oil and oil filter shall be replaced at least, and the tractor shall be started once a month, and it shall be driven at a low speed (20 ~ 30) min to check whether there is any abnormal phenomenon in each part. Keep the exterior of the tractor clean and dry to prevent corrosion of the tractor.

6.4 Unsealing of Tractor

6.4.1 Remove grease used for rust prevention.

6.4.2 Open all closed pipe orifices. Clean the tractor.

6.4.3 Add coolant, engine oil and diesel oil as required, and add grease to all lubricating points.

6.4.4 Check the voltage and install the battery in accordance with the Battery Instructions.

6.4.5 Remove the rust inhibitor from the groove of the fan belt and install the belt. Adjust the tightness of the drive belt according to the technical requirements (see *Engine Operation and Maintenance Instructions*).

6.4.6 Install the battery, and coat the wiring terminals with vaseline.

6.4.7 Check the fastening situation of each circuit and pipeline.

6.4.8 Operate the tractor according to the instructions

Note: For sealing and unsealing of the engine, refer to *Engine Operation and Maintenance Instructions*.

7 Delivery, Acceptance and Transportation

7.1 Delivery and Acceptance

The users shall check and accept the purchased tractors while purchasing, focusing on the following aspects:

- Accompanying documents are complete

  The accompanying documents include: Operation Manual for Tractor, Product Qualification Certificate, Three Guarantees Service Certificate, Packing List of Accompanying Items, "Engine Accompanying Technical Documents" (from engine supporting manufacturers), and Parts Diagram of the Tractor. Check whether the corresponding numbers on the *Product Qualification Certificate*, *Three Guarantees Service Certificate* and *Engine Accompanying Technical Documents* are consistent with the real products.

- Accompanying items are complete

  Check the accompanying items according to *Accompanying Items Packing List*, including accompanying spare parts and accompanying tools. Engine accompanying items shall be subject to the provisions in the *Engine Accompanying Technical Documents* (if doubtful, please contact the dealer).

- Tractor is in good condition

  As the tractor is shipped or driven to delivery, the technical condition may change, and the user can further determine the machine condition while purchasing.

7.2 Transportation

During the transportation, if it is transferred by itself, it shall strictly abide by the traffic rules, and the driving distance between the two tractors shall be at least 60m to avoid accidents causing crashes; if it is transferred by vehicles, the following points shall be achieved:

- During loading or unloading of the tractors, a flat place shall be selected;
- Special unloading platform shall be used during loading or unloading of the tractors.
- There must be assistants to guide on site, and no irrelevant personnel shall be allowed to approach.
- After loading, put the suspension rod piece to the lowest position, pull the hand brake, shift to the reverse gear, pull out the starting key, lock the door, and turn off the main power switch.
- Fix the front and rear of the four tires in "splayed" shape with iron wires, reliably fasten the front and rear tires with wedges, and pull the rear axle beam with iron wires.
- Pull the rearview mirror inward if possible, and remove it if necessary. At the same time, make sure that the hood is closed. With safety frame model,

If necessary, place the safety frame in the folding position and fix it firmly.

- When crossing culverts and bridges, pay full attention to whether there is superelevation, and fully slow down when turning.
- When unloading, release the hand brake first, shift to the forward gear, and slowly drive downward at the lowest speed.
- When containers are transported, they must be packed by special pile racks or complete vehicles to ensure that the tractors in the containers are firmly fixed.

Important:

1. During loading and unloading of the tractors, the parking brake of the loading truck shall be firmly braked, and the front and rear wheels shall be reliably fastened, so as to avoid that the tractor and the operator tip over or falling down due to the sudden start of the truck.

2. During loading and unloading, the tractor is driven at the lowest speed.

8 Technical Specifications

8.1 Product Model

The product model of LOVOL-TE series tractor has the following meanings:

TE ○ ○ ○

- C:cab; R: Rear ROPS
- Type code, 0 indicates four-wheel type for rear-wheel drive; 4 indicates four-wheel drive type
- Power code, indicated by the engine rated power value (kW) multiplying by an integer close to the coefficient of 1.36.
- Series code

The corresponding power is as follows:

Power corresponding to product model: The rated power of TE4043C and TE4043R wheeled tractors is 29.4 kW [40PS]

Product executive standard: Q/LWZ 001 *LOVOL Wheeled Tractor*

Diagram of Product Model and Factory Number Location

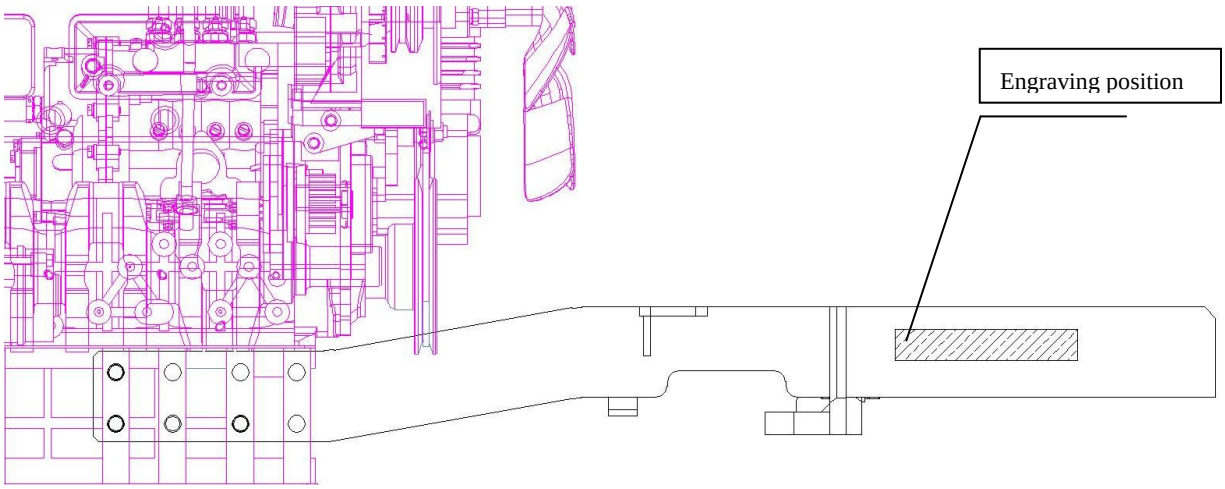

8.2 Main Technical Specifications for Four-wheel Drive Models of TE Series Tractors

Table 8-1 Main Technical Specifications for Four-wheel Drive Models of LOVOL-TE Series Tractors

Model		Unit	LOVOL	
			TE4043C	**TE4043R**
Type		——	4 ×4 wheeled	
Calibration traction force		kN	10	
Maximum power of power output shaft		kW	≥28.3	
Overall dimensions	Length (from counterweight to suspension)	mm	3650	
	Width		1560	
	Height (to safety frame/cab)		2235	2530
Wheelbase			1810	
Wheel tread	Front wheels		1263	
	Rear wheel		1200~1400	
Ground clearance	Minimum ground clearance		355 (Front axle)	
	Agricultural ground clearance		270 (Towing)	

Technical Specifications

Model			Unit	LOVOL	
				TE4043C	**TE4043R**
Minimum turning circle radius	With unilateral braking		m	3.0±0.3	
	Without unilateral braking			3.5±0.3	
Structure mass	Without counterweight		kg	1780	1671
Minimum service mass	With driver, full of oil and water, without counterweight			1850	1752
Minimum mass distribution	Front axle	Without counterweight		715	677
		With counterweight		837	795
	Rear axle	Without counterweight		1135	1075
		With counterweight		1223	1165
Counterweight	Front counterweight (minimum preloading weight)			80	
	Rear counterweight (monolithic)			31	
Maximum service weight			kg	2800	
Maximum trailer weight		Independent brake		5000	
		Inertial braking		2000	
Noise index	External noise level	Dynamic		80	79
		Static		76	77
Vibration index		(59 KG) Light mass	m/s	0.6	
		(98 KG) Heavy mass		1.15	
Engine	Model		——	Doushan D18	
	Type		——	Upright, water-cooled, 4-stroke diesel engine	
	Number of cylinders		——	3	
	Cylinder diameter × stroke		mm	90×94	
	Nominal frequency		kW	29.4	
	Nominal speed		r/min	2,350	
	Maximum torque/speed		N·m/(r/min)	160/1400	
	Fuel consumption under rated conditions		(g/kW·h)	≤225	
	Oil consumption under rated conditions			≤2.04	
	Lubrication method		——	Pressure type	
	Starting mode		——	Electrical start	
Number of gears			——	8+8	
Specification of rear drive wheel			——	12.4-24	

Technical Specifications

Model					Unit	LOVOL	
						TE4043C	**TE4043R**
	Shuttle gear	Forward gear	Low speed	1	Km/h	1.97	
				2		2.96	
				3		4.66	
				4		6.42	
			High speed	1		9.09	
				2		13.70	
				3		21.52	
				4		29.67	
		Reverse gear	Low speed	1		1.74	
				2		2.63	
				3		4.13	
				4		5.69	
			High speed	1		8.06	
				2		12.16	
				3		19.09	
				4		26.33	
Transmission system	Clutch				——	Ten-inch dual-acting clutch	
	Gear box				——	Double shaft, mechanical gear box, 8+8 shuttle gear	
	Rear axle	Central transmission			——	Spiral bevel gear	
		Differential mechanism			——	Enclosed, two conical planetary gears	
		Differential lock			——	Tooth embedded type	
		Rear final transmission			——	Built-in, single straight gear	
Traveling system	Rack				——	Half rack	
	Tire pressure	Front			kPa	150~180	
		Rear				150~180	
	Tire Specification	Front			——	7.5-16	
		Rear			——	12.4-24	
Steering system	Method				——	Front wheel steering	
	Steering gear				——	Full-hydraulic steering gear	
Braking system	Service brake				——	Wet-type brake	
	Parking brake				——	Plate- and wet-type brake	
Working device	Hydraulic system type				——	Open and semi-separated	
	Hydraulic oil pump				——	CB-F16/9	
	Distributor				——	Sliding valve type	
	Oil cylinder	Diameter ×stroke			mm	90×103	
		Type				Single action	

Model				Unit	LOVOL	
					TE4043C	**TE4043R**
	Suspension mechanism			mm	Rear-mounted three-point suspension type I Upper suspension point, connecting pin × length: φ22 × 61 Lower suspension point, connecting hole × width: φ25.4 × 35	
	Adjustment method of tillage depth			——	Liquid level control	
	Maximum lifting force (610 mm behind the lower suspension point)			kN	8.5	
	Pressure for opening the system safety valve			MPa	16~20	
	Hydraulic pressure output	Type		——	Rear-mounted type	
		Qty.		——	Two-way valve	
		Specification		——	M22 ×1.5 or NPT1/2	
		Function		——	The hydraulic pressure of the hydraulic pump is provided to the farm tool for driving the farm tool.	
Power output shaft	Type			——	Rear-mounted, independent type	
	Specification			——	φ34.9 tooth rectangular spline shaft	
	Speed			r/min	540/1000	
	Maximum inclination of drive shaft connected to PTO			Degree	15°	
Traction and towing devices	Traction device	Type		——	Swing type	
		Height from the ground		mm	270	
		Maximum vertical load	Drawbar	kg	0	
			U-shaped connecting device	kg	5000	
	Towing device			——	U-hook	
Cab				——	Sealed cab	
Safety frame				——	Two-column type	
Driver’s seat				——	Mechanical floating type, PVC surface layer, front and rear adjustable	
Electric instrumentation system	Electrical system			——	12V negative grounding two-wire system	
	Generator	Model		——	/	
		Voltage		V	14	
		Power		kW	0.35	

Model			Unit	LOVOL	
				TE4043C	**TE4043R**
	Battery	Model	——	95D31	
		Voltage	V	12	
		Capacity	A·h	90	
		Qty.	——	1	
	Lighting and signal devices	Headlamp	——	12V, 55W, combined	
		Front turn signal lamp	——	12V, 35W, 2 pcs	
		Rear combination lamp	——	12V, brake light 21W, turn signal light 21W, rear position lamp 5W (all for two)	
		Rear work lamp	——	12V, 28W, 2 pcs	
		Trailer socket	——	6-hole trailer socket, 1	
	Monitoring and warning device	Instrument	——	General instrument cluster: fuel gauge, water temperature gauge and timer	
		Warning device	——	Signal lights and devices: brake lights, left and right turn lights, front and rear position lamp, reflectors and safety warning signs	
Irrigation volume	Radiator		L	5	
	Fuel tank			38	
	Engine oil pan			5	
	Oil for transmission case			26	
	Oil for front drive axle			5.5	

9 Dismantling and Disposal

For your personal safety and social environment protection, please hand over the machine to a recycling company with a professional license for dismantling if the whole service life of the machine expires. Please dismantle from top to bottom, first outside and then inside. Lifting appliance must be used while dismantling large objects or heavy objects. The battery shall be handed over to a professional battery recycling company. Waste engine oil, etc. shall be disposed of in a centralized and proper manner and shall not be dumped at will to pollute the environment.

Warning: The battery electrolyte is corrosive, so it can not be splashed into eyes, and on skin and clothes. If splashed with acid, you must be washed with clear water immediately and treated in hospital as soon as possible to avoid accidental injury.

Warning: The replaced battery acid will pollute the environment and can not be dumped at will.

The replaced engine oil belongs to waste oil, and cannot be discarded at will to avoid polluting the environment.

Reminder: without professional dismantling tools and practical operation experience, improper placement during and after dismantling may cause personal injury.

Warning: Lifting appliance must be used while dismantling large objects or heavy objects! Pay attention to personal safety!

10 Warranty Items

10.1 Basis of Product Warranty

LOVOL TE、ARBOS TE series TE404C, Te404R and ARBOS 2040 wheeled tractors are guaranteed according to the following documents and regulations.

Provisions on the Warranties for the Repair, Replacement and Return of Agricultural Machinery Products formulated by the State Economic and Trade Commission in 1998, Document No. 123

Product Quality Law of the People's Republic of China

Law of the People’s Republic of China on the Protection of the Rights and Interests of Consumers

10.2 Situations of Non-warranty

According to relevant laws and regulations, the warranty will not be valid in some cases. See the accompanying document Three Guarantees Service Certificate for details.

Note: Some behaviors may invalidate the warranty conditions. For details, please refer to Three Guarantees Service Certificate.

Note: If the tractor is modified by the user or used for purposes other than those specified in the operating manual, it will beyond the manufacturer's warranty. Please pay attention.

Appendix 11

11.1 Oil and Solution for Tractor

Table 11-1 Oil and Solution for Tractor

Parts requiring oil and solution	Oil and solution
Fuel tank	D-975 fuel recommended by American Society of Testing and Materials. Use 2-D grade oil at normal temperature, and use 1-D grade oil when the temperature is lower than 5℃.
Engine oil pan	Lubricant oil viscosity of oil pan, fuel injection pump, governor oil and oil-bath air filter must conform to SAE viscosity classification of American Society of Automotive Engineers, and SAE10W shall be used below -5℃. SAE15W/40 multi-grade oil, which can be used all-season, shall be used above -5℃. The quality level shall conform to API CD standard of American Petroleum Institute.
Engine radiator	Temperature above 4℃: clean soft water Temperature below 4℃: antifreeze only Minimum temperature above -15℃: -25# long-acting antifreeze (SH/T0521-1999) Minimum temperature above -25℃: -35# long-acting antifreeze (SH/T0521-1999) Minimum temperature above -35℃: -45# antifreeze (SH/T0521-1999)
Gearbox, rear axle, hydraulic lifting oil, front drive axle, steering gear	Transmission system, lifter, hydraulic steering, central and final transmission of front drive axle adopt MF1135 or Ford M2C 86A of Massey Ferguson Company or dual-purpose oil J20A of John Dill Company.
Oil cup	Adopt D-217 lubricant grease with viscosity grade 2 of American National Lubrication Grease Institute (NLGI).

Important:

1. Transmission hydraulic dual-purpose oil, diesel oil and diesel engine oil must be precipitated for at least 48h before using, so as not to reduce the cleanness and affect the machine service performance;
2. It is strictly prohibited to mix oil of different grades and manufacturers! Avoid affecting engine performance.

Note:

1. Never refuel while the diesel engine is running to avoid danger;
2. The fuel tank can't be filled up if the tractor works in the torrid weather, otherwise the fuel will overflow due to expansion and cause an accident. And once it overflows, it should be wiped immediately.

Important: The cooling water should be clean soft water (such as rainwater, snow water or river water, etc.). If hard water (such as well water, spring water, etc.) is used, it should be boiled in advance, and added into the water tank after precipitation, so as not to damage the water tank.

11.2 Tightening Torques of Main Bolts and Nuts

Table 11-2 Tightening Torque of Main Bolts and Nuts

Name and assembly position	Thread specification	Tightening torque (N·m)
Connecting bolts/nuts of engine and clutch housing	M10	41~51
Connecting bolts of clutch housing and rear axle box	M14X1.5	123~154
Fixing bolts of shaft 1 and shaft 2 bearing seat	M10	41~51
Fixing bolts of interlocking press seat	M10	50~70
Fixing bolts of driven spiral bevel gear	M10X1.25	45~55
Connecting bolts of drive shaft housing and rear axle housing	M12×1.5	73~89
Connecting bolts of drive wheel hub and wheel disk	M18×1.5	397~457
Lock nuts of front axle tie rod	M16X1.5	122~149
Connecting bolt of front outer shaft and front inner shaft assembly	M14	122~149
Connecting bolts of front drive wheel and front wheel hub and wheel disk	M14×1.5	178~218
Connecting bolts of front axle and bracket	M16	182~222
Connecting bolts of front bracket and battery rack	M12	73~89
Connecting bolts of bracket and engine	M12	73~89
Connecting bolts of bracket and engine	M14X1.5	126~154
Connecting bolt of lifter housing and rear axle housing	M10	41~51
Connecting bolt of steering gear and clutch housing	M14	122~149
Connecting bolts of limit rod bracket	M14	122~149

Warning: When people are tightening the main bolts and nuts of the tractor, torque wrench must be used, so as not to result in performance degradation of the whole machine and personal injury and other hazards due to failure to meet the tightening torque requirements.

11.3 Tractor Rolling Bearing

Table 11-3 List of Tractor Rolling Bearings

S/N	Code	Bearing code	Shaft bearing name	Installation position	Qty.
1	GB/T 276	6203-Z	Deep groove ball bearing	Front end of clutch shaft	1
2	GB/T 276	6006	Deep groove ball bearing	Front end of power output transmission shaft	1
3	GB/T 276	6206	Deep groove ball bearing	Front end of transfer case output shaft	1
4	GB/T 276	6207	Deep groove ball bearing	Rear end of power output shaft	1
				Central transmission driving gear	2
5	GB/T 276	6208	Deep groove ball bearing	End deceleration driving gear of front drive axle	2
				Central transmission driven gear of front drive axle	2
6	GB/T 276	6210	Deep groove ball bearing	Outer end of drive shaft	2
7	GB/T 276	6211	Deep groove ball bearing	Inner end of drive shaft	2
8	GB/T 276	6305	Deep groove ball bearing	Rear end of power output transmission shaft	1
				Front end of power output shaft	1
				Rear end of transfer case output shaft	1

S/N	Code	Bearing code	Shaft bearing name	Installation position	Qty.
9	GB/T 276	6307	Deep groove ball bearing	Outer end of short axle shaft	2
10	GB/T 276	6207N	Deep groove ball bearing	Front end of transmission case first shaft	1
11	GB/T 283	NT206E	Cylindrical roller bearing	Rear end of transmission case first shaft	1
12	GB/T 283	NUP2207E	Cylindrical roller bearing	Rear end of transmission case second shaft	1
13	GB/T 297	31305	Tapered roller bearing	Front end of transmission case second shaft	2
14	GB/T 297	32011	Tapered roller bearing	Both ends of differential	2
15	GB/T 297	977907	Bearing	Lower end of steering gear worm	1
		977907K	Bearing	Upper end of steering gear worm	1
16	GB/T 297	30205	Tapered roller bearing	Outer end of front wheel hub	2
17	GB/T 297	30206	Tapered roller bearing	Inner end of front wheel hub	2
18	GB/T 301	51106	Unidirectional thrust ball bearing	Steering knuckle vertical shaft	2
				Lower end of front final transmission housing	2
19		688711	Release bearing	Clutch release bearing	1
20	GB/T 5846	K202417	Needle roller bearing	Transfer case intermediate shaft	2

S/N	Code	Bearing code	Shaft bearing name	Installation position	Qty.
21	GB/T 5846	K253120	Needle roller bearing	Transfer case output shaft	2
22	GB/T 5846	K283327	Needle roller bearing	III~IV gear driven gear	2
23	GB/T 5846	K303527	Needle roller bearing	High and low gear fixed gear	2
24	GB/T 292	7206AC	Angular contact ball bearing	Inner end of front drive shaft	2
25	GB/T 292	7208AC	Angular contact ball bearing	Outer end of front drive shaft	2
26	GB/T 297	32007	Tapered roller bearing	Middle part of driving bevel gear shaft	1
27	GB/T 297	32010	Tapered roller bearing	Differential housing of front axle	2
28	GB/T 297	32207	Tapered roller bearing	Front end of driving bevel gear shaft	1
29	GB/T 5846	K424822	Needle roller bearing	Ⅳ gear driving gear	1
				Ⅲ gear driving gear	1

11.4 Tractor Chassis Seals:

Table 11-4 List of Tractor Chassis Seals

Component	Specification		Installation position	Qty.
Transmission case	GB/T 9877.1 Rotating shaft lip seal ring	B35×55×8	Front end of first shaft	2
		FB35×55×8	Inside the bearing cover of the power output shaft	2
		B50×72×8	Outside of drive shaft	6
		B55×75×8	Inner side of drive shaft	4
	JB/T2600 Framework oil seal	PD50×80×12	Final transmission driving gear shaft	2
	GB/T3452.1 O-ring	11.8×1.8G	Power output fork shaft	1
		15×2.65G	Differential lock fork shaft	1
		22.4×2.65G	Reverse gear shaft	1
		28×3.55G	Final transmission driving gear shaft	2
		67×3.55G	Second shaft front bearing seat	1
		103×3.55G	Rear axle bearing seat	2
		112×3.55G	Drive shaft sleeve	2
Brake	GB/T3452.1 O-ring	15×2.65G	Brake camshaft	2
Front axle	Non-standard (see drawing)	Vertical shaft oil seal 38×74×11.5	Lower end of steering knuckle	2
		Axle shaft oil seal 38×74×11.5	Front wheel hub	2
	GB/T3452.1 O-ring	30×3.55G	Upper end of left and right steering knuckle	2
			Both ends of swing shaft	2

Appendix

Component	Specification		Installation position	Qty.
Steering gear	GB/T9877.1 Rotating shaft lip seal ring	B30×45×8	Steering vertical arm shaft	1
Lifter	JB/T2600 Framework oil seal	PD42×62×10	Lifting shaft	2
	JB/T 982 Sealing gasket	10×13.5	Oil drain plug	1
		10×13.5	Cylinder head	2
		18×22	Hydraulic output hollow bolt	1
		36×42	Refueling vent plug assembly	1
	GB/T3452.1 O-ring	71×2.65G	Cylinder liner and housing sealing	1
		17×2.65G	Cylinder head regulating valve	1
		53×5.3G	Piston cylinder barrel	1
		53×5.3G	Piston cylinder barrel	1
		53×5.3G	Piston cylinder barrel	1
Distributor	GB/T3452.1 O-ring	9×2.65G	Handle shaft, safety valve seat	1
			Joint surface with lifter housing	1
		13.2×2.65G	Safety valve pressure plug	1
		15×2.65G	Joint surface with lifter housing	1
		19×2.65G	Joint surface with lifter housing	1
Oil pump and oil circuit	GB/T3452.1	O-ring 18×2.65G	Oil suction point of oil pump	1

Appendix

Component	Specification		Installation position	Qty.
Transfer case	JB/T2600 Framework oil seal	SG30×45×8	Transfer case output shaft	1
	GB/T3452.1 O-ring	12.5×1.8G	Transfer case fork shaft	1
		36.5×2.65G	Front end of rear sheath weldment	2
		53×2.65G	Rear end of rear sheath weldment	1
Front drive axle	JB/T2600 Framework oil seal	PG45×65×10	Oil seal seat	2
		SD45×70×10	Front drive shaft	2
		SD50×70×12	Lower end of vertical shaft sleeve	2
		W50×72×7	Lower end of vertical shaft sleeve	2
	GB/T 3452.1 O-ring	33.5×3.55G	Driving bevel gear shaft	2
		34.5×3.55G	Bearing cover	2
		40×3.55G	Front swing shaft	2
		56×2.65G	Dustproof tube seat	1
		67×3.55G	Front swing shaft	2
		75×2.65G	Bearing cover	2
			Outer end of axle shaft sleeve	2
		80×3.55G	Rear support	2
		85×3.55G	Driving bevel gear bearing seat	2
		170×3.55G	Drive shaft cover	2
		175×3.55G	Inner end of axle shaft sleeve	2

11.5 Supporting Agriculture Tools of LOVOL TE Series Tractors

Table 11-5 Supporting Agriculture tools of LOVOL TE Series Tractors

Category	Tractor model	Supporting machines and tools	Machines and Tools model	Main technical parameters
Farmland machinery	TE 254	Suspended three-furrow plough	1L-320	Tillage depth (140~180) mm
		Suspended double-furrow plough	1L-325	Tillage depth (200~220) mm
		Suspended double-furrow plough	1L-227	Tillage depth (140~200) mm
	TE 304/ TE 354	Suspended three-furrow plough	1L-325	Tillage depth (160~200) mm
			1L-327	Tillage depth (140~200) mm
			1L-420	Tillage depth (140~180) mm
	TE 254	Rotary cultivator	1GQN-125	Tillage depth (120~140) mm, Tillage width 1,250 mm
	TE304/ TE354		1GQN-140	Tillage depth (120~140) mm, Tillage width 1,400 mm
Farmland machinery	TE 254	18-notched harrow	1BY-1.8	Tillage depth: (80~100) mm, Tillage width 1,800 mm
	TE304/ TE354	20-notched harrow	1BY-1.9	Tillage depth: (80~100) mm, Tillage width 1,900 mm
Seeding machinery	TE254 TE304 TE354	Seeder	2BJ-4 (Soybean, corn)	4 rows, row spacing (500 ~ 700) mm
			2B-12/16 (Wheat)	12/16 rows
			2BM-2/4 (Cotton)	2/4 rows, coating
	TE254	Multipurpose seeder for wheat and corn	2BXY-12/4	Number of rows: wheat 12, corn 4
Paddy field operation machines and tools	TE254	Flatting and pudding paddy field machine	1ZSN-160 1ZSN-180	Tillage depth (80~100) mm
	TE304 TE354		1ZSN-200	
	Full series four-wheel drive	Flatting and pudding paddy field machine	1BSMQ-14 1BSMQ-16	Tillage depth (120~160) mm
Spray machine	Full series	Suspended pulling pesticide sprayer	3W-200/6	Tank capacity: 200L, spray width: 6m
Straw returning machine	TE354	Straw returning machine	4JH-1.0	Working width 1,000m, stubble (20~80) mm

Appendix

Category	Tractor model	Supporting machines and tools	Machines and Tools model	Main technical parameters
Stubble cleaner	TE254	Harvesting machinery	1GM-2/3	Working width 1,250m, tillage depth (120 ~ 150) mm
	TE304 TE354		SGTN-140	Working width 1,400m, tillage depth (120 ~ 150) mm
			1GM-2/3	Speed of stubble cutter: 400 r/min
Harvesting machinery	TE254/TE304 TE354	Soybean windrower	4G-2.4	Cutting width: 2,400 mm
	TE254	Windrower	4S-170	Cutting width: 1,700 mm
Trencher	TE254 TE304 TE354	Chain trencher	YLK-20 1KS-30-25	Trenching width: 130/160/200 mm Trenching depth: (500 ~ 1600) mm Type: 30*20

Note: Before using the supporting agricultural tools, the operator shall carefully read the Operation and Maintenance Manual, and be familiar with the structure, performance, operation method and reasonable supporting, so as to prevent agricultural tools and person from accidents.

Important:

1. Before purchasing agricultural tools, firstly select the types of supporting agricultural tools referring to this detail according to the operation conditions (soil resistance, agricultural requirements, etc.) in the operation area, and consult dealers;

2. Refer to the consultation opinions and confirm the main technical parameters such as the model of agricultural tools for reasonable supporting according to the tractor model (power level) purchased and the operation conditions (soil resistance, agricultural tools, etc.) in the operation area. If the supporting is unreasonable, it will bring adverse effects to the unit;

3. Different operating conditions (soil resistance, agronomic requirements, etc.) will lead to different operating efficiency and effect of the same tool. The users is requested to reasonably determine the operating speed and operating width according to local operating conditions, so as not to affect the operating efficiency and performance of the machine.

Dear Customer:

Thank you very much for your patronage, purchasing and using LOVOL-TE series wheeled tractors. We are willing to serve you wholeheartedly by solving your problems during usage in a timely and effective manner and meeting your requirements to the maximum extent.

The "User Information Feedback Form" is hereby sent to you along with the Instruction Manual. Please fill it out in block letters and send it by registered mail to the Three Guarantees Service Center of Overseas Business Department of Weichai Lovol Heavy Industry Co., Ltd., No. 192, South Beihai Road, Fangzi District, Weifang City, Shandong Province, postcode: 261206. The company will enter your User Information Feedback Form into the computer for storage, so as to implement the "Three Guarantees" service for you.

Thank you sincerely for your cooperation and substantial support!

User Information Feedback Sheet

Product model		Tractor factory number			Engine manufacturer		
Engine number		Date of production			Date of purchase		
User name		Age		Degree of education		Diving years	
Home address				Tel.		Postal code	
Main purpose of purchasing the tractor				Load of tractor			
Fault time and cause							
Name and condition of damaged parts							
Opinion on improvement and suggestion							

Note: This feedback form is filled out by the tractor owner (or tractor driver) truthfully, so as to know the tractor usage and provide better service for you. The User Information Feedback Form is valid after copying.